Arabian Nights Kiosk

Inspiration / Research

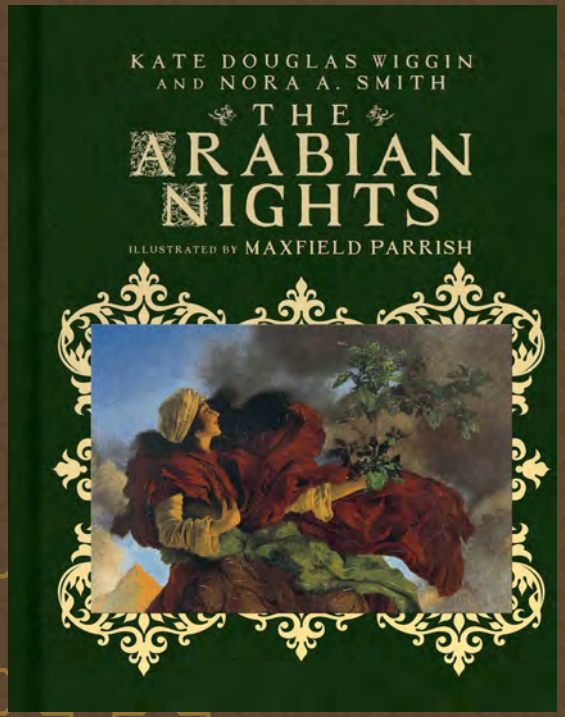

"Don't you know Ahmed the cobbler?" said one of the bystanders, laughing; "he has been inspired, and is become an astrologer."

Basic planning & Research

Foreshadowing is the self-fulfilling prophecy

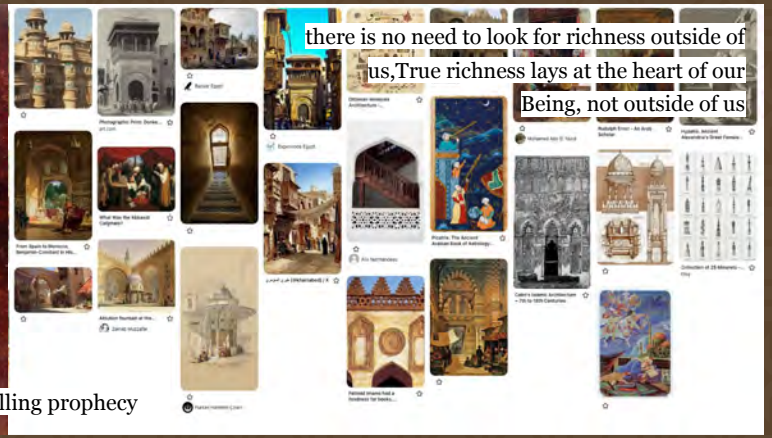

there is no need to look for richness outside of us,True richness lays at the heart of our Being, not outside of us

one anomaly always generates another. So a chain of anomalies is set up. And the more logical, tightly knit, essential this chain is, the more beautiful the tale.

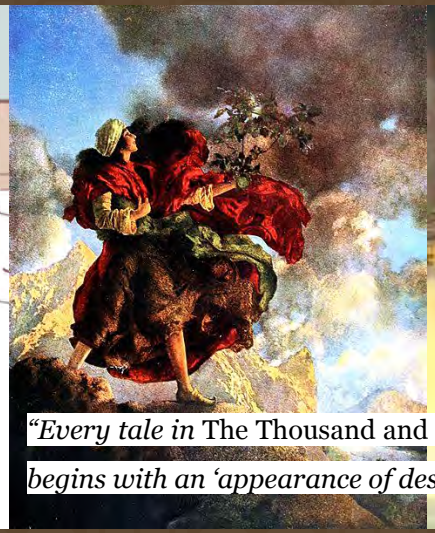

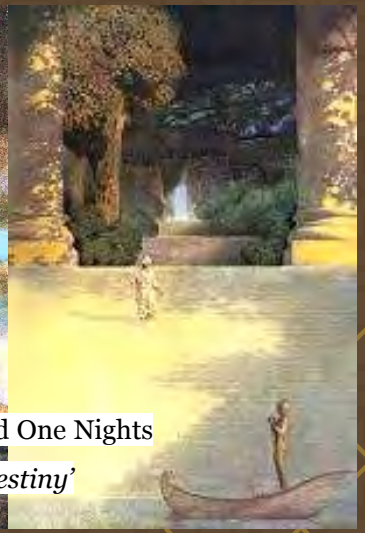

"Every tale in The Thousand and One Nights *begins with an 'appearance of destiny'*

Concept Statement

Step into the world of ancient wisdom and celestial insight, where enigmatic astrologist Ahmed awaits to unveil the secrets of the stars and decipher the fates of our guests. Embark on a magical journey guided by fabled Arabian mysticism, as our seasoned astrologist reads the cosmic patterns to reveal personalized destinies.

Refernce

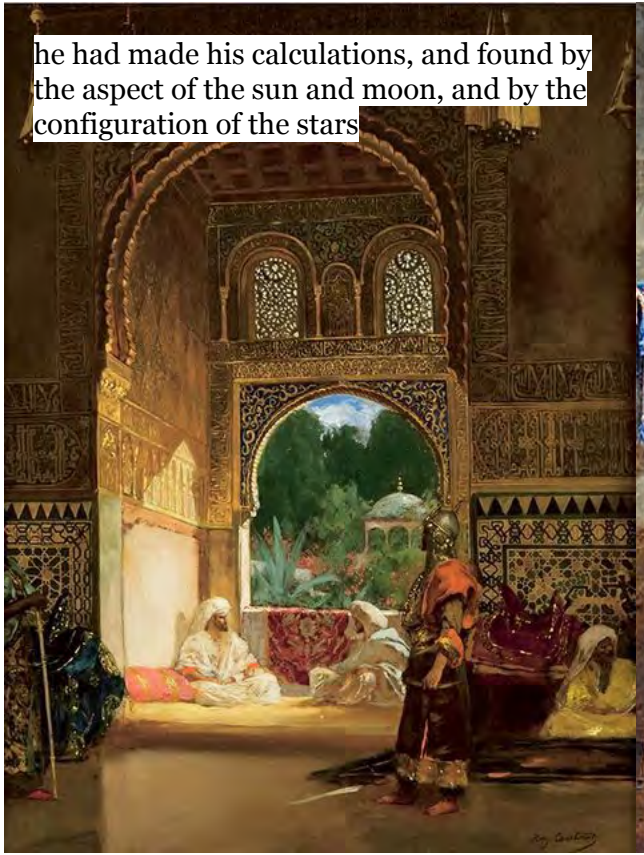
he had made his calculations, and found by
the aspect of the sun and moon, and by the
configuration of the stars

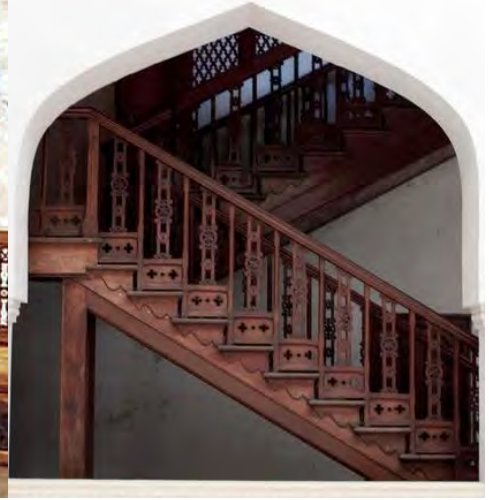

Sketches

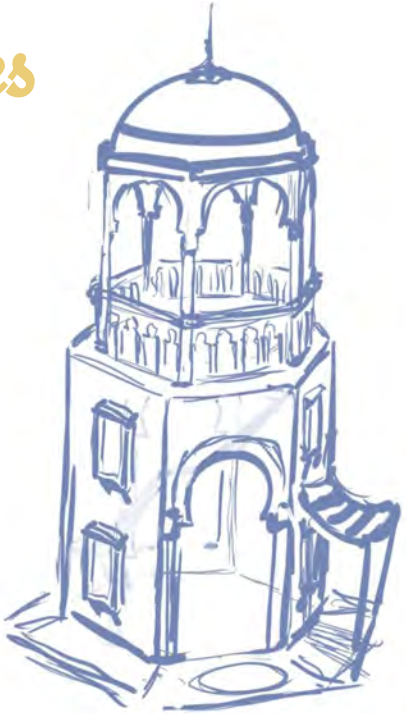

window
Reading area
Study props
Seating + waiting covered area

‘AHMED’S ASTROLOGICAL READINGS’

KIOSK DESIGN INTENT PACKADGE

Tia DESIGN CONSULTANT

NOTES

COMPANY & CONTACT INFO

REVISIONS

NO.	DNE	REVISED FOR	DESCRIPTION	REVIEWED BY

KEY REVIEWS

APPROVALS

PAGE NUMBER K000

PROJECT NUMBER 001

SHEET TITLE KIOSK HERO

PROJECT NUMBER A100

Component Name	Description	Page Locations	Material Reference
PATT01	pattern/engraving	A121, A116	see pages
PATT02	pattern/engraving	A111	see pages
PATT03	pattern/engraving	A113, A111	see pages
PATT04	pattern/engraving	A111, A108	see pages
PATT05	pattern/engraving	A123, A124, A112, A111	see pages
PATT06	pattern/engraving	A124, A112, A111, A108	see pages
PATT07	pattern/engraving	A124	see pages
PATT08	pattern/engraving	A112, A111	see pages
PATT09	pattern/engraving	A123, A112	see pages
PATT10	pattern/engraving	A113, A109	see pages
PATT11	pattern/engraving	A106	see pages
PATT12	pattern/engraving	A116	see pages
W001	Entry wall, contains EF005	A106	Textured stucco, wood, gypsum board
W002	Upper window only	A106	Textured stucco, wood, gypsum board
W003	Upper and Lower Window complex	A106	Textured stucco, wood, gypsum board
W004	Back wall, contains large specialty window	A106	Textured stucco, wood, gypsum board
EF001	Dome and Spire	A108	consult with fabrication team
EF002	Balcony Railing	A109	Finished & sealed wood
EF003	Balcony Pillar	A109	Finished & sealed wood
EF004	Balcony Arches	A110	consult with fabrication team
EF005	Entry Archway	A111	Stucco, wood
EF006	Upper Window	A112	Finished & sealed wood
EF007	Lower Window	A113, A114	Finished & sealed wood
S001	Marquee Sign	A117	consult with fabrication team
CF001	POS Bench	A116	Finished & sealed wood
CF002	Bookshelf	A124	Finished & sealed wood
CF003	Study Chair	A123	Finished & sealed wood
CF004	Desk	A122	Finished & sealed wood
SS01	Staircase	A121	consult with fabrication team

Tia DESIGN CONSULTANT

NOTES

COMPANY & CONTACT INFO

REVISIONS

NO.	DNE	REVISED FOR	DESCRIPTION	REVIEWED BY

KEY REVIEWS

APPROVALS

PAGE NUMBER K001

PROJECT NUMBER 001

SHEET TITLE SCOPE MATRIX & TOC

PAGE NUMBER A101

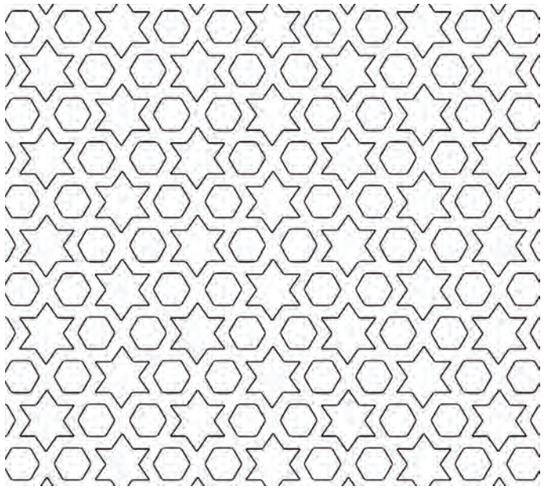

01 PATT01 PATTERN 1
NTS

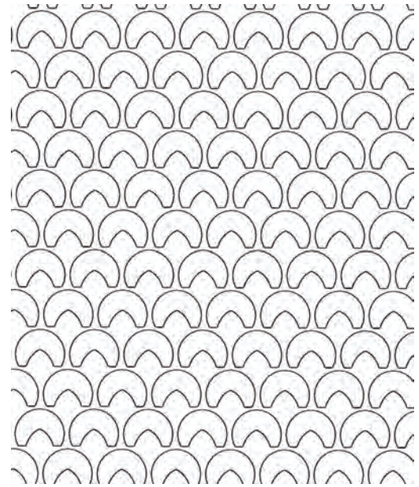

02 PATT02 PATTERN 2
NTS

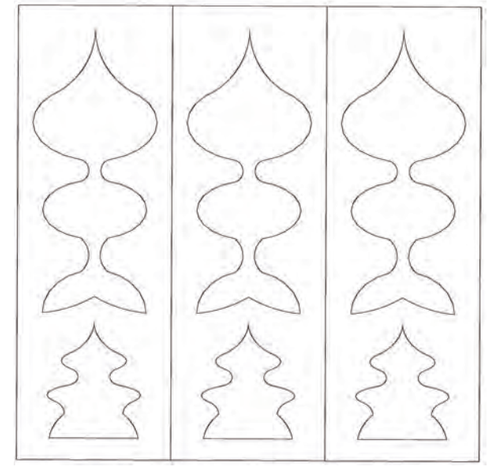

03 PATT03 PATTERN 3
NTS

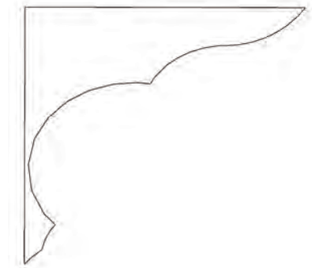

04 PATT04 PATTERN 4
NTS

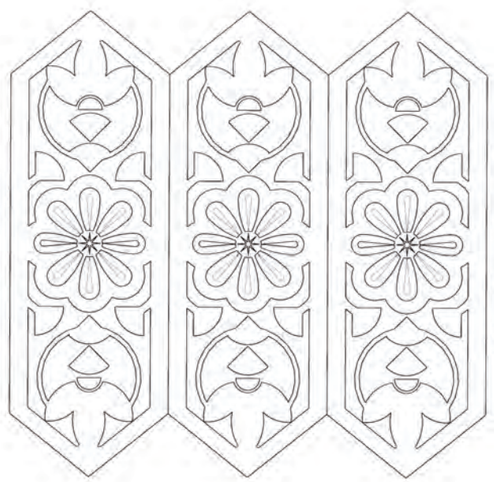

05 PATT05 PATTERN 5
NTS

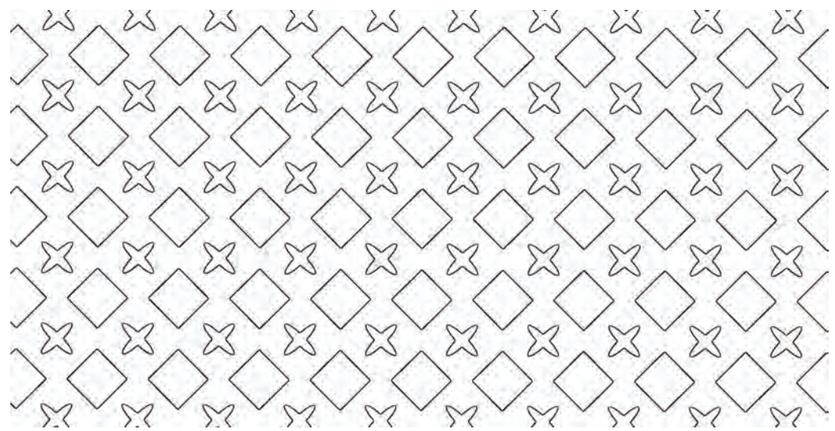

06 PATT06 PATTERN 6
NTS

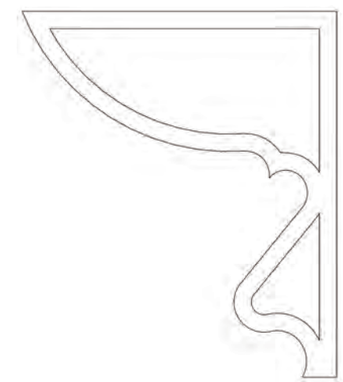

07 PATT 07 PATTERN 7
NTS

Tia DESIGN CONSULTANT

NOTES	REVISIONS					KEY REVIEWS	APPROVALS	PAGE NUMBER	PAGE NUMBER
	NO.	DNE	REVISED FOR	DESCRIPTION	REVIEWED BY			K002	
								PROJECT NUMBER 001	A102
COMPANY & CONTACT INFO								SHEET TITLE PATTERN BREAKDOWN	

01 PATT08 PATTERN 8
NTS

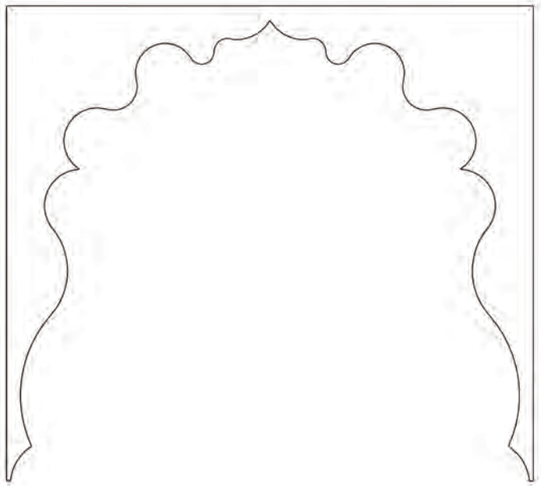

02 PATT09 PATTERN 9
NTS

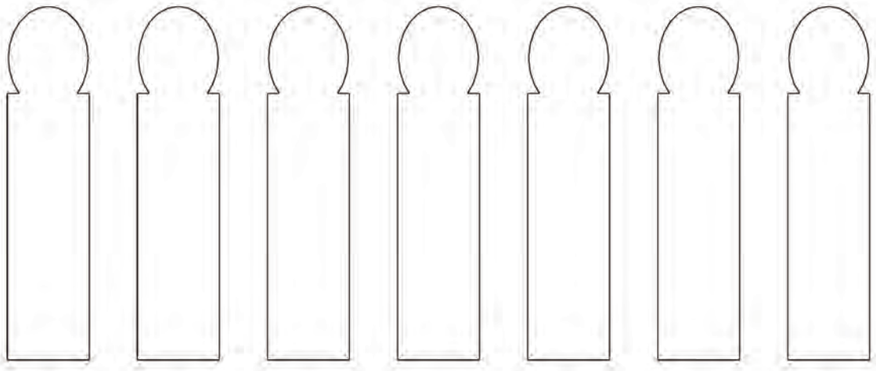

03 PATT10 PATTERN 10
NTS

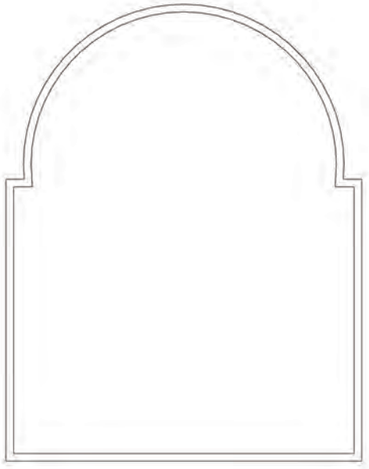

04 PATT11 PATTERN 11
NTS

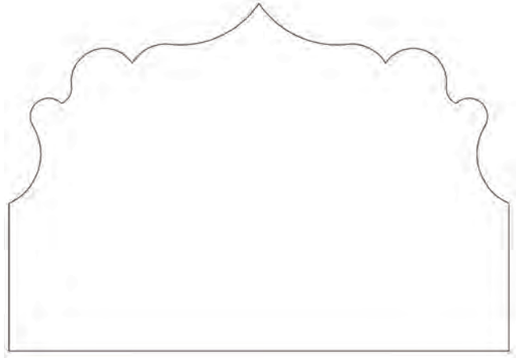

05 PATT12 PATTERN 12
NTS

Tia DESIGN CONSULTANT

NOTES	REVISIONS					KEY REVIEWS	APPROVALS	PAGE NUMBER	PAGE NUMBER
	NO.	DNE	REVISED FOR	DESCRIPTION	REVIEWED BY			K003	
								PROJECT NUMBER 001	A103
COMPANY & CONTACT INFO								SHEET TITLE PATTERN BREAKDOWN	

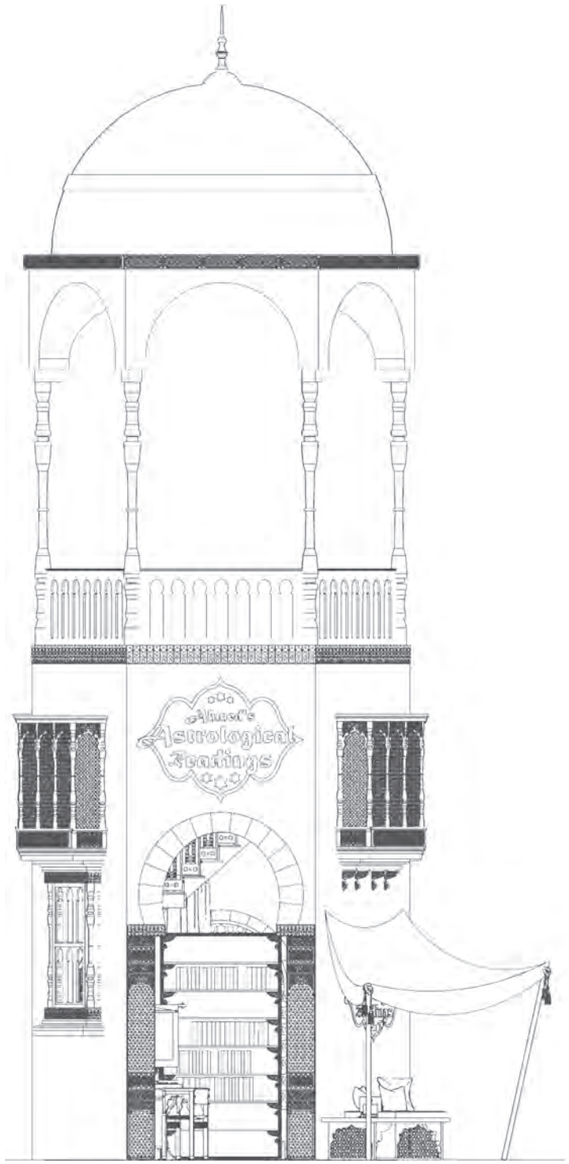

01
EW01
EXTERIOR WALL ELEVATION- FRONT
SCALE: 1'=1/6"

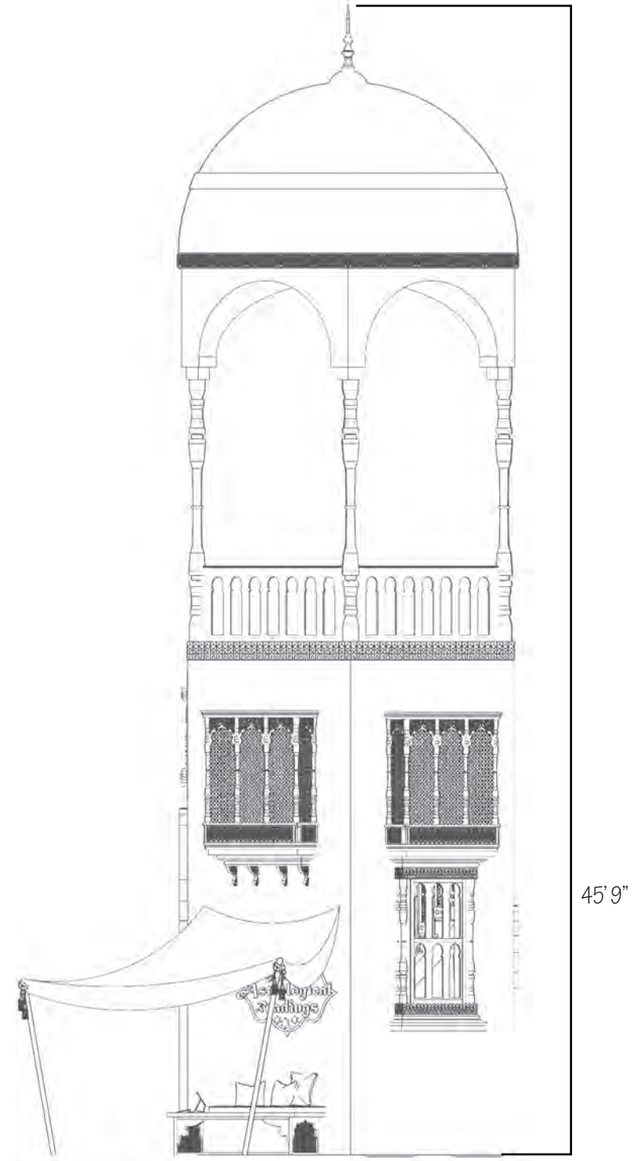

02
EW02
EXTERIOR WALL ELEVATION- RIGHT SIDE
SCALE: 1'=1/6"

Jia DESIGN CONSULTANT

NOTES	REVISIONS					KEY REVIEWS	APPROVALS	PAGE NUMBER	PAGE NUMBER
	NO.	DNE	REVISED FOR	DESCRIPTION	REVIEWED BY			K004	
								PROJECT NUMBER 001	A104
COMPANY & CONTACT INFO								SHEET TITLE KIOSK- MAIN ELEVATIONS	

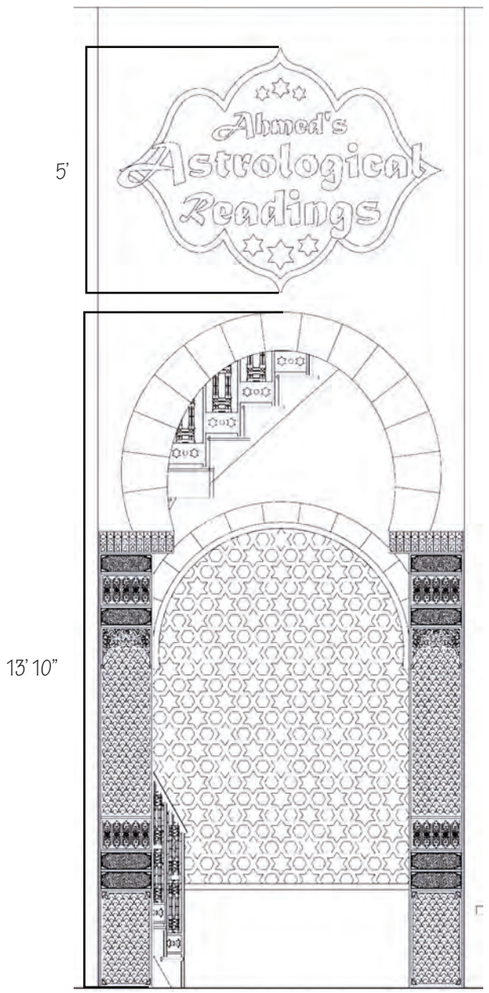

01 W001 WALL 001 EXTERIOR ELEVATION
SCALE: 1'=1/3"

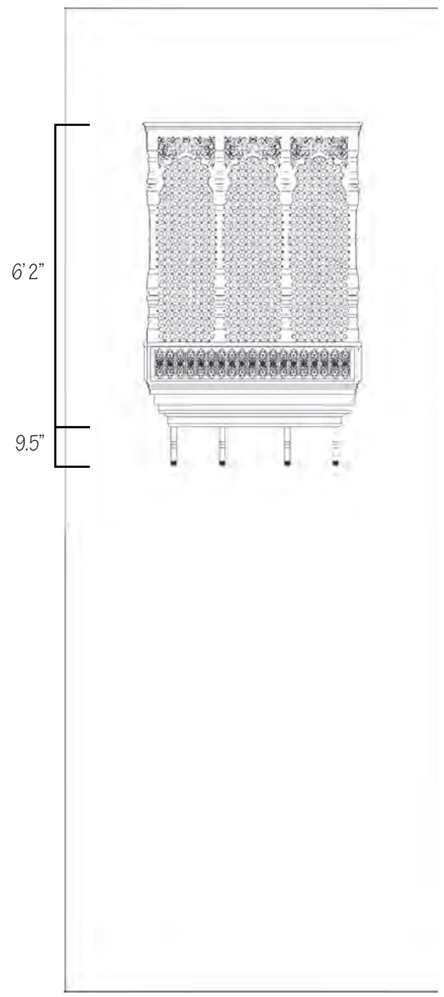

02 W002 WALL 002 EXTERIOR ELEVATION
SCALE: 1'=1/3"

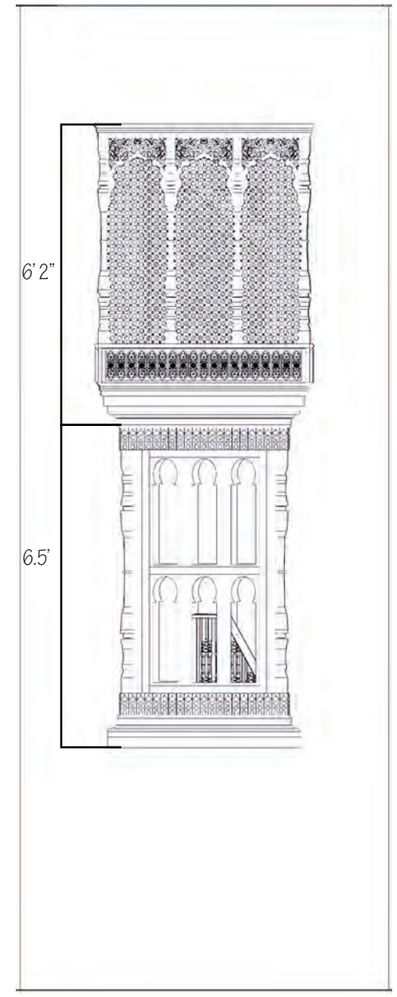

03 W003 WALL 003 EXTERIOR ELEVATION
SCALE: 1'=1/3"

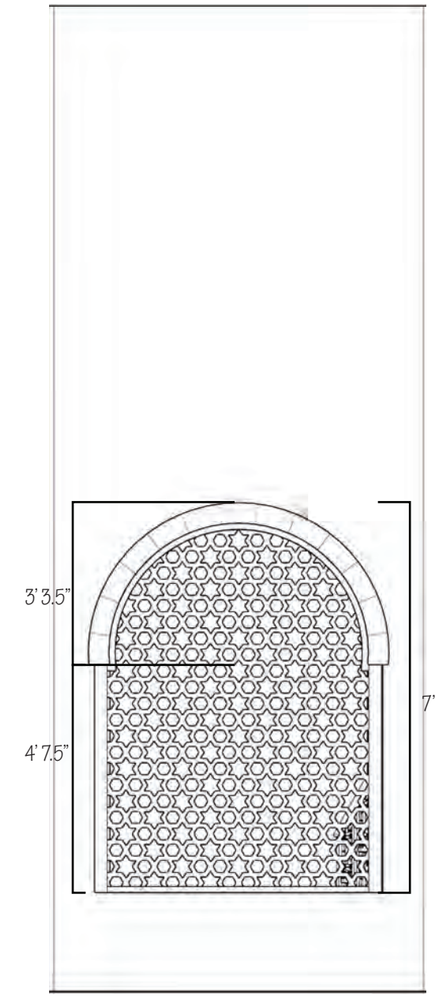

04 W004 WALL 004 EXTERIOR ELEVATION
SCALE: 1'=1/3"

Tia DESIGN CONSULTANT

NOTES	REVISIONS					KEY REVIEWS	APPROVALS	PAGE NUMBER	PAGE NUMBER
	NO.	DNE	REVISED FOR	DESCRIPTION	REVIEWED BY			K006	
								PROJECT NUMBER 001	A106
COMPANY & CONTACT INFO								SHEET TITLE WALL ELEVATIONS	

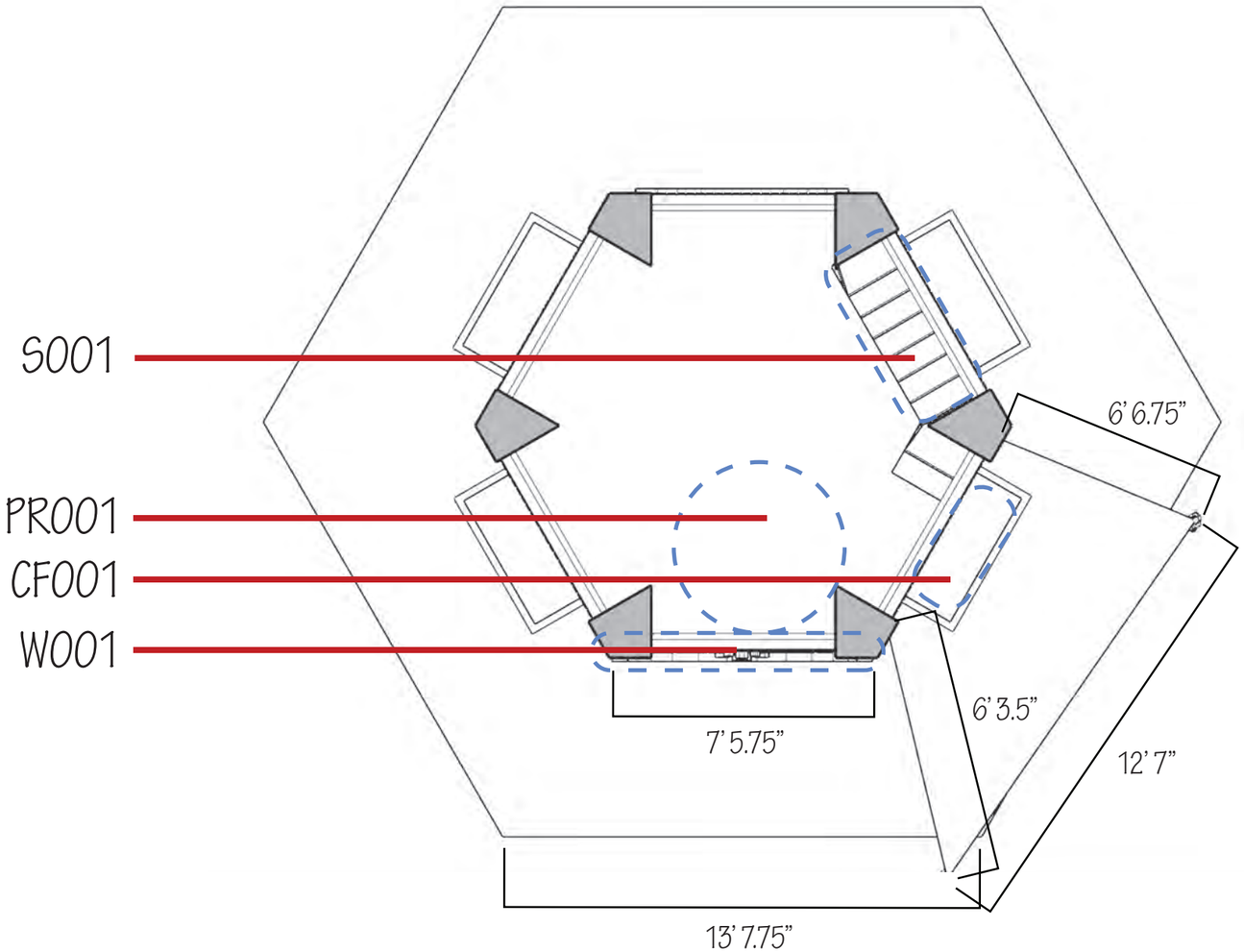

01 CID01 COMPONENT IDENTIFICATION REFERNCE
SCALE: NTS

02 FP002 BALCONY PLAN VIEW WITH CALLOUTS
SCALE: NTS

Tia DESIGN CONSULTANT

NOTES	REVISIONS					KEY REVIEWS	APPROVALS	PAGE NUMBER	PAGE NUMBER
	NO.	DNE	REVISED FOR	DESCRIPTION	REVIEWED BY			K007	
								PROJECT NUMBER 001	A107
COMPANY & CONTACT INFO								SHEET TITLE WALL CALLOUTS	

01 CID01 COMPONENT IDENTIFICATION REFERNCE
SCALE: NTS

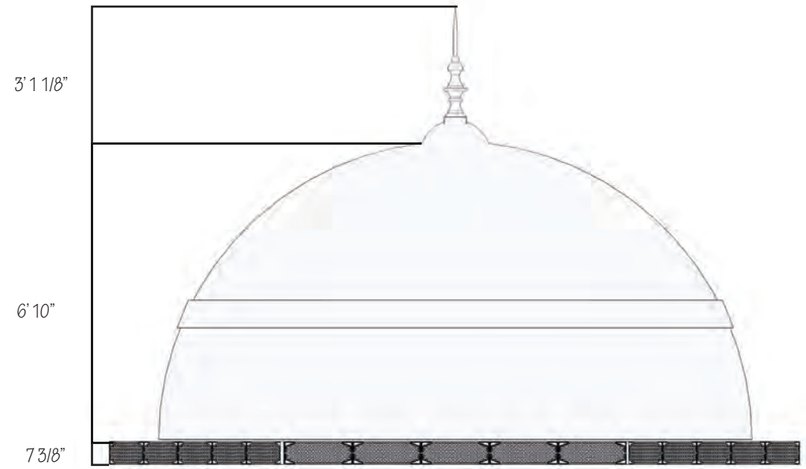

02 DV01 DOME (EF001) ELEVATION
SCALE: NTS

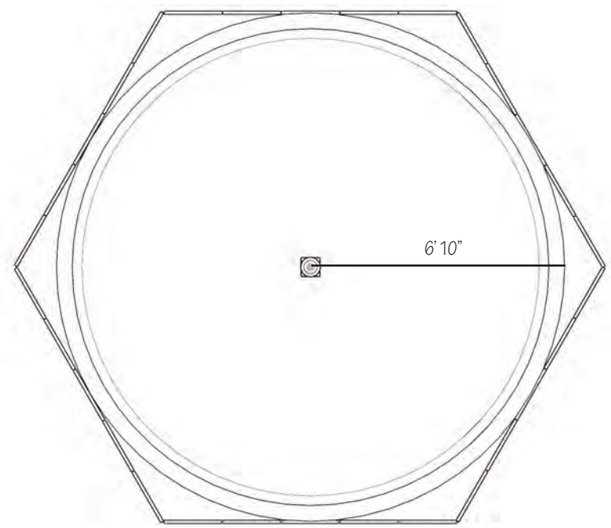

03 DV02 DOME (EF001) PLAN VIEW
SCALE: NTS

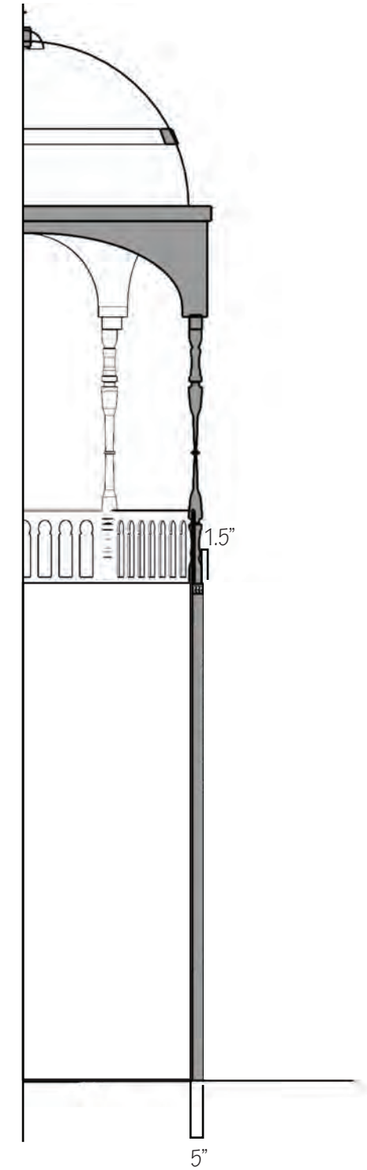

04 SECT01 SECTION VIEW OF KIOSK WALLS AND BALCONY
SCALE: NTS

Tia DESIGN CONSULTANT

NOTES

DV01 features the use of patterns **PATT06** and **PATT04**

COMPANY & CONTACT INFO

REVISIONS

NO.	DNE	REVISED FOR	DESCRIPTION	REVIEWED BY

KEY REVIEWS

APPROVALS

PAGE NUMBER K008

PROJECT NUMBER 001

SHEET TITLE DOME & BALCONY

PROJECT NUMBER A108

01 CID01 COMPONENT IDENTIFICATION REFERNCE
SCALE: NTS

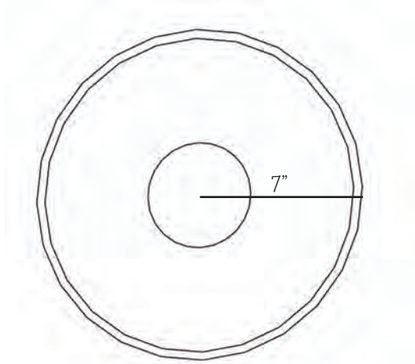

02 EF003 BALCONY PILLAR (EF003) PLAN VIEW
SCALE: NTS

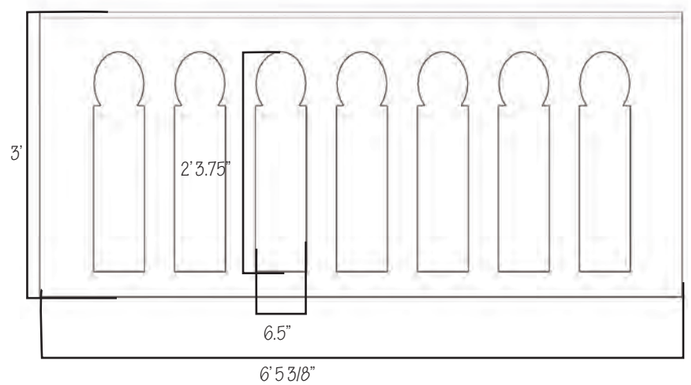

03 EF002 BALCONY RAILING (EF002) ELEVATION
SCALE: NTS

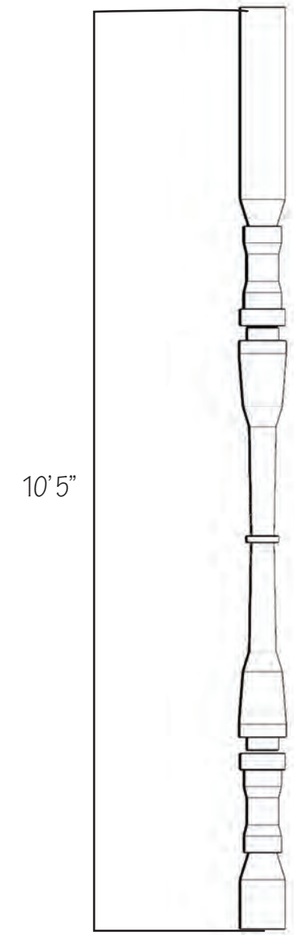

04 EF003.1 BALCONY PILLAR (EF003) ELEVATION
SCALE: NTS

05 EF002.1 BALCONY RAILING (EF002) SECTION
SCALE: NTS

Tia DESIGN CONSULTANT

NOTES

EF002 features the use of pattern **PATT10**

COMPANY & CONTACT INFO

REVISIONS

NO.	DNE	REVISED FOR	DESCRIPTION	REVIEWED BY

KEY REVIEWS

APPROVALS

PAGE NUMBER K009

PROJECT NUMBER 001

SHEET TITLE RAILING & PILLAR

PAGE NUMBER A109

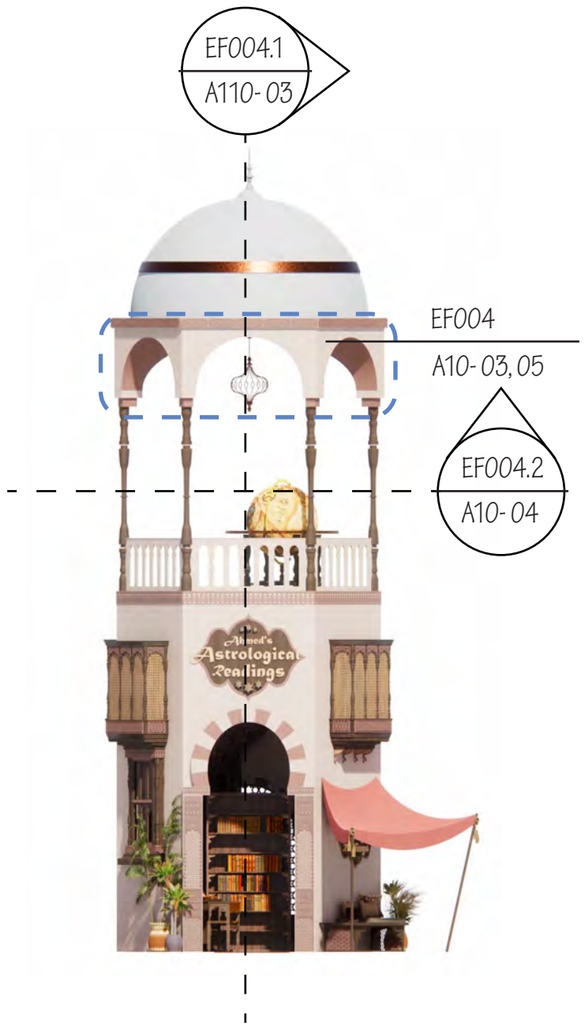

01 CID01 COMPONENT IDENTIFICATION REFERNCE
SCALE: NTS

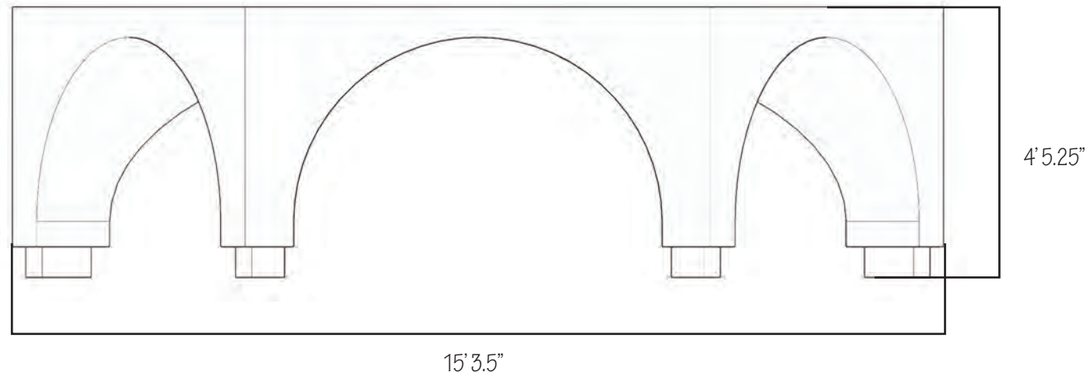

02 EF004 BALCONY ARCHES ELEVATION
SCALE: NTS

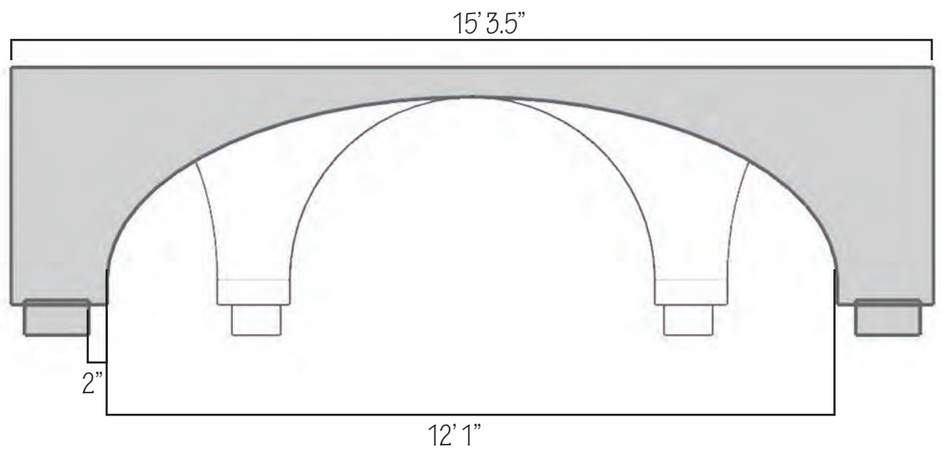

03 EF004.1 BALCONY ARCHES (EF004) SECTION
SCALE: NTS

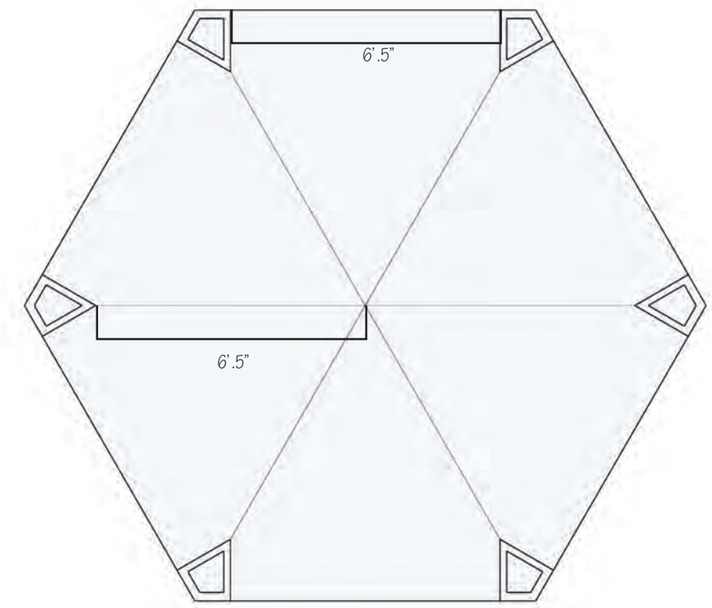

04 EF004.2 BALCONY ARCHES 9EF004) PLAN VIEW FROM BASE
SCALE: NTS

Tia DESIGN CONSULTANT

NOTES	REVISIONS					KEY REVIEWS	APPROVALS	PAGE NUMBER	PAGE NUMBER
	NO.	DNE	REVISED FOR	DESCRIPTION	REVIEWED BY			K010	
								PROJECT NUMBER 001	A110
COMPANY & CONTACT INFO								SHEET TITLE BALCONY ARCHES	

EF005.1
A111-03

01 CID01 COMPONENT IDENTIFICATION REFERNCE
SCALE: NTS

02 EF005 ENTRY ARCHWAY (EF005) RENDER CONCEPT
SCALE: NTS

03 EF005.1 ENTRY ARCHWAY (EF005) SIDE SECTION
SCALE: NTS

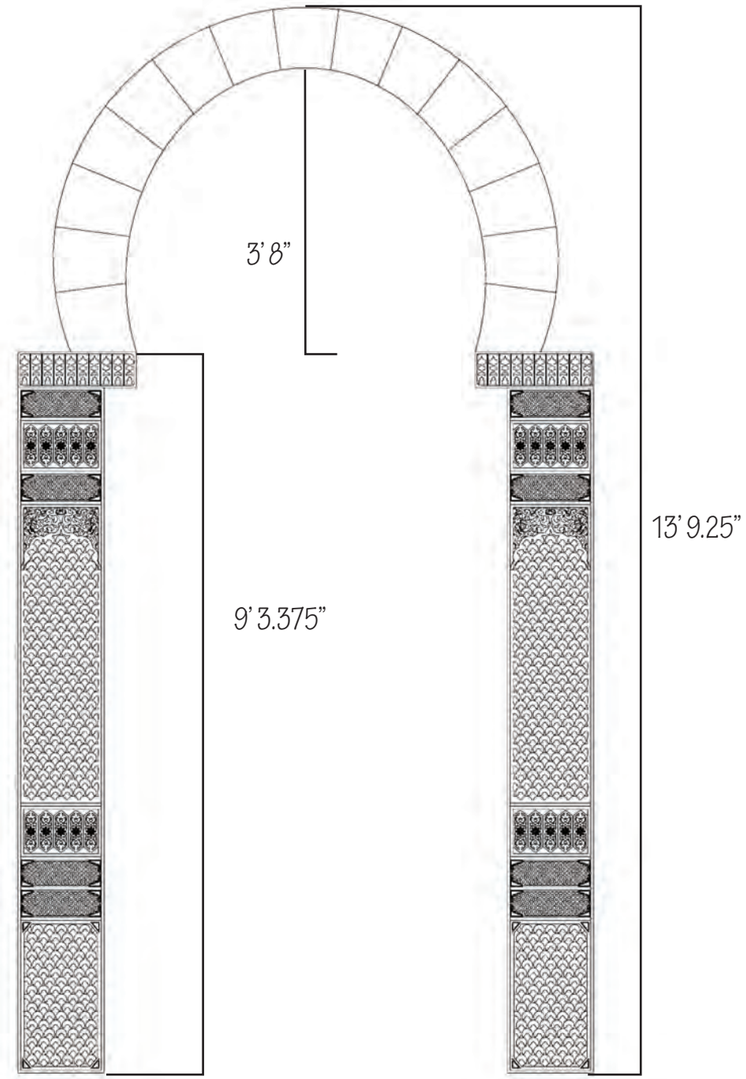

04 EF005.2 ENTRY ARCHWAY (EF005) ELEVATION
SCALE: NTS

Tia DESIGN CONSULTANT

NOTES

EF005 features the use of patterns **PATT02, 03, 04, 05, 06, 08,** and **09**

COMPANY & CONTACT INFO

REVISIONS				
NO.	DNE	REVISED FOR	DESCRIPTION	REVIEWED BY

KEY REVIEWS

APPROVALS

PAGE NUMBER K011

PROJECT NUMBER 001

SHEET TITLE ENTRY ARCH

PAGE NUMBER A111

EF006

A112- 02, 03, 04

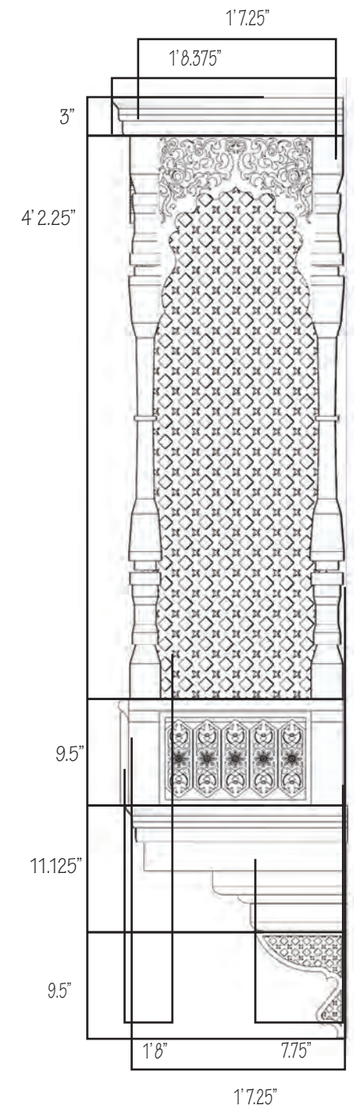

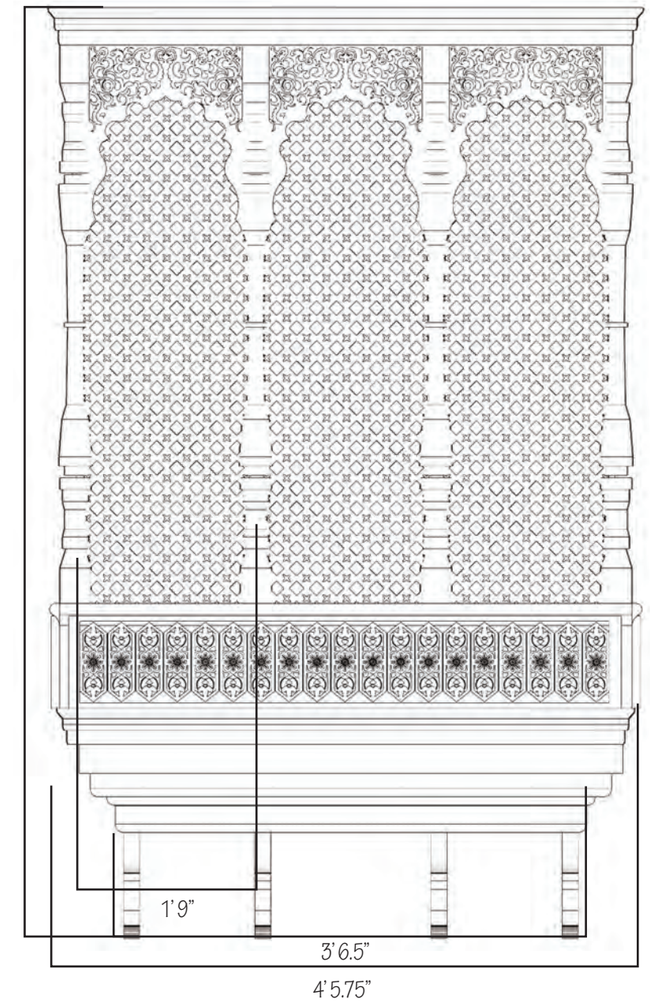

01 CID01 COMPONENT IDENTIFICATION REFERNCE
SCALE: NTS

02 EF006.1 UPPER WINDOW (EF006) RENDER
SCALE: NTS

03 EF006.2 UPPER WINDOW (EF006) SIDE ELEVATION
SCALE: NTS

04 EF006.3 UPPER WINDOW (EF006) FRONT ELEVATION
SCALE: NTS

Tia DESIGN CONSULTANT

NOTES

EF006 features the use of patterns **PATT05, PATT06, PATT08,** and **PATT 09**

COMPANY & CONTACT INFO

REVISIONS

NO.	DNE	REVISED FOR	DESCRIPTION	REVIEWED BY

KEY REVIEWS

APPROVALS

PAGE NUMBER K012

PROJECT NUMBER 001

SHEET TITLE UPPER WINDOW

PAGE NUMBER A112

EF007

A113- 02, 03, 04,

02 EF007 LOWER WINDOW (EF007) RENDER CONCEPT
SCALE: NTS

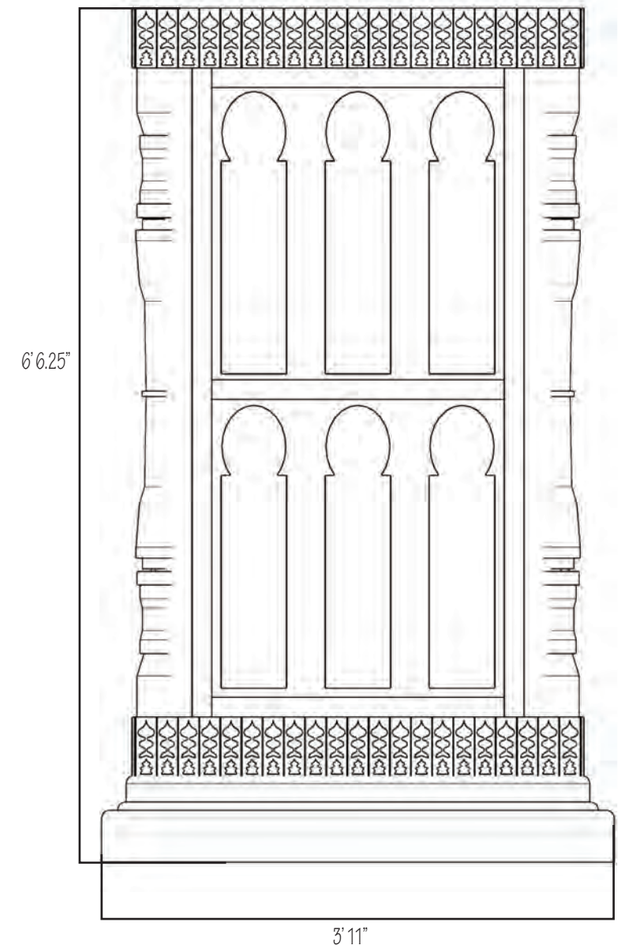

03 EF007.1 LOWER WINDOW (EF007) ELEVATION
SCALE: NTS

04 EF007.2 LOWER WINDOW (EF007) SIDE ELEVATION
SCALE: NTS

01 CID01 COMPONENT IDENTIFICATION REFERNCE
SCALE: NTS

Tia DESIGN CONSULTANT

NOTES

EF007 features the use of patterns **PATT03** and **PATT10**

COMPANY & CONTACT INFO

REVISIONS

NO.	DNE	REVISED FOR	DESCRIPTION	REVIEWED BY

KEY REVIEWS

APPROVALS

PAGE NUMBER K013

PROJECT NUMBER 001

SHEET TITLE LOWER WINDOW

PAGE NUMBER A113

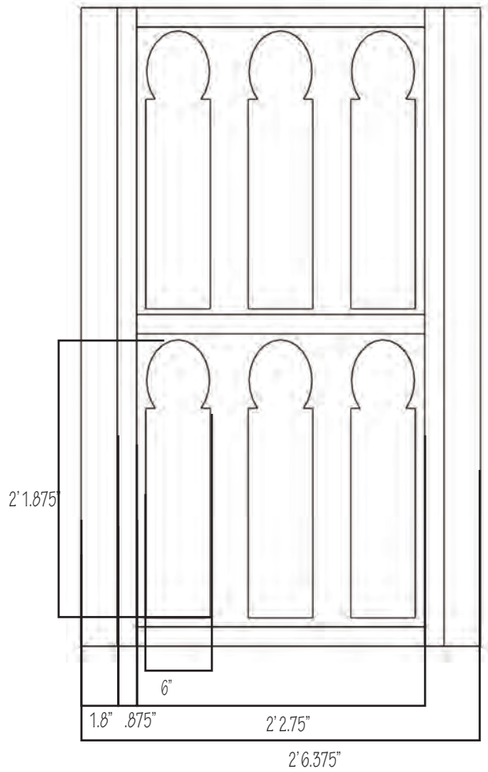

01 EF007A — EF007 FRAME (EF007A) ELEVATION
SCALE: NTS

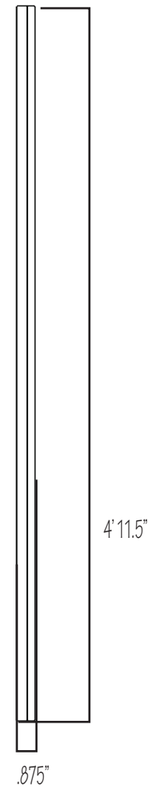

02 EF007A.1 — EF007 FRAME (EF007A) SIDE ELEVATION
SCALE: NTS

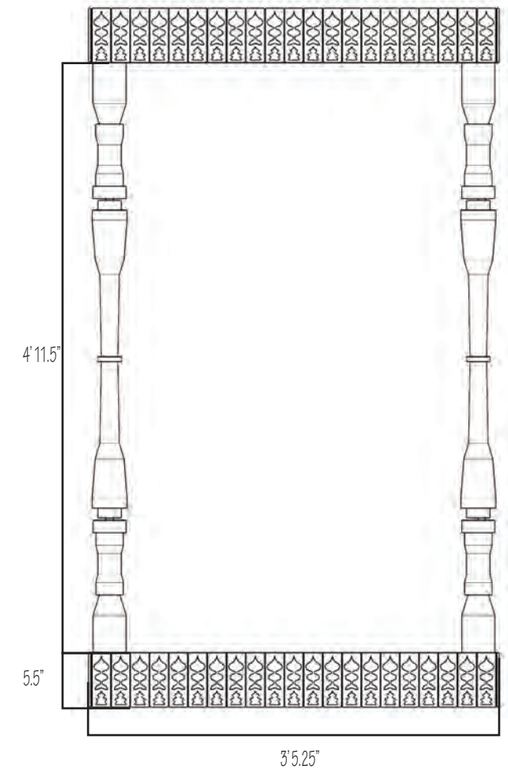

03 EF007B — EF007 OUTER FRAME (EF007B) ELEVATION
SCALE: NTS

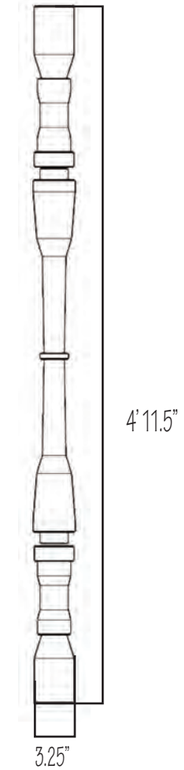

04 EF007C — EF007 PILLAR (EF007C) ELEVATION
SCALE: NTS

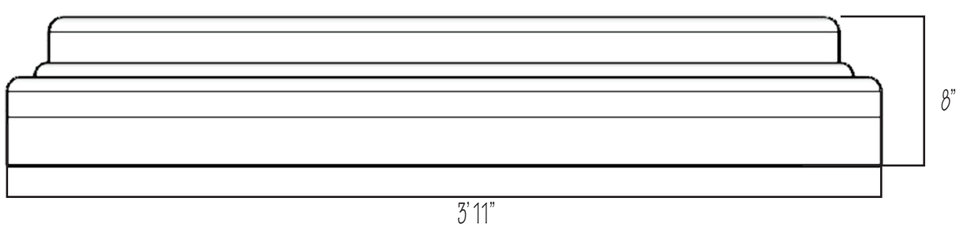

05 EF00D — EF007 BASE MOULDING (EF007D) ELEVATION
SCALE: NTS

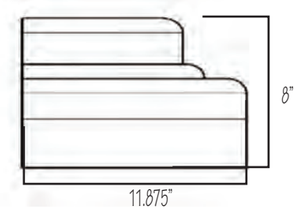

06 EF007D.1 — EF007 BASE MOULDING (EF007D) SIDE ELEVATION
SCALE: NTS

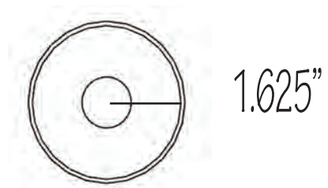

07 EF007C.1 — EF007 PILLAR (EF007C) PLAN VIEW
SCALE: NTS

Tia DESIGN CONSULTANT

NOTES	REVISIONS					KEY REVIEWS	APPROVALS	PAGE NUMBER	PAGE NUMBER
	NO.	DNE	REVISED FOR	DESCRIPTION	REVIEWED BY			K014	
								PROJECT NUMBER 001	A114
COMPANY & CONTACT INFO								SHEET TITLE LOWER WINDOW CONT.	

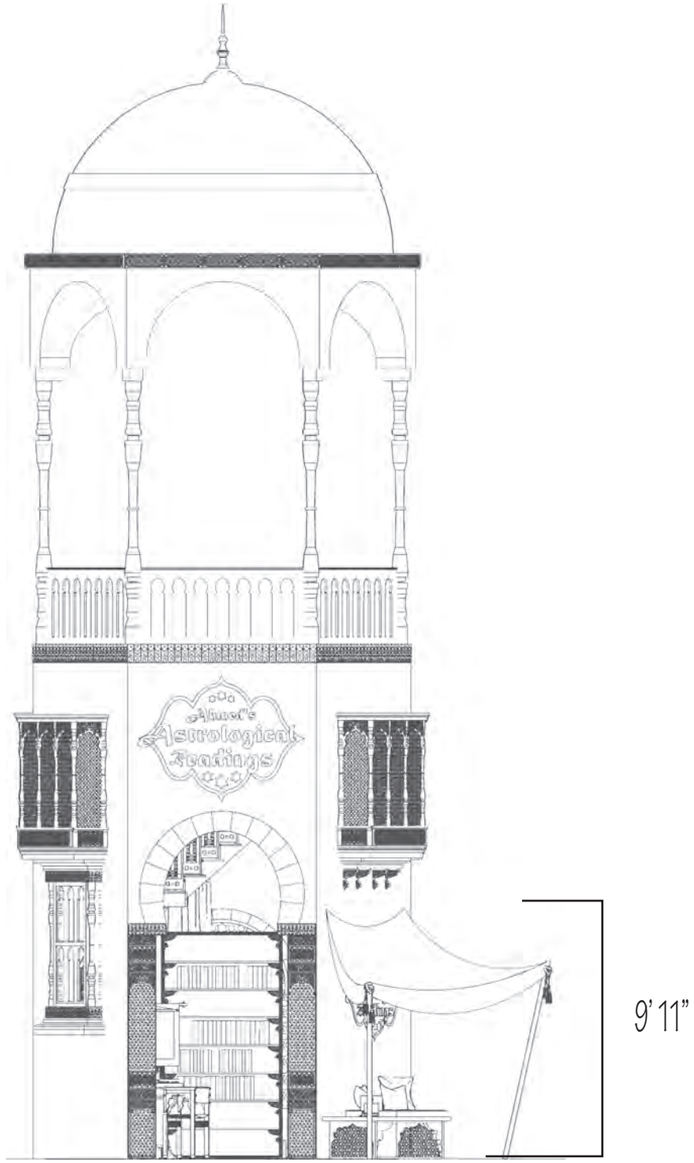

01 C001 POS AND CUE ELEVATION- FRONT
SCALE: 1'=1/6"

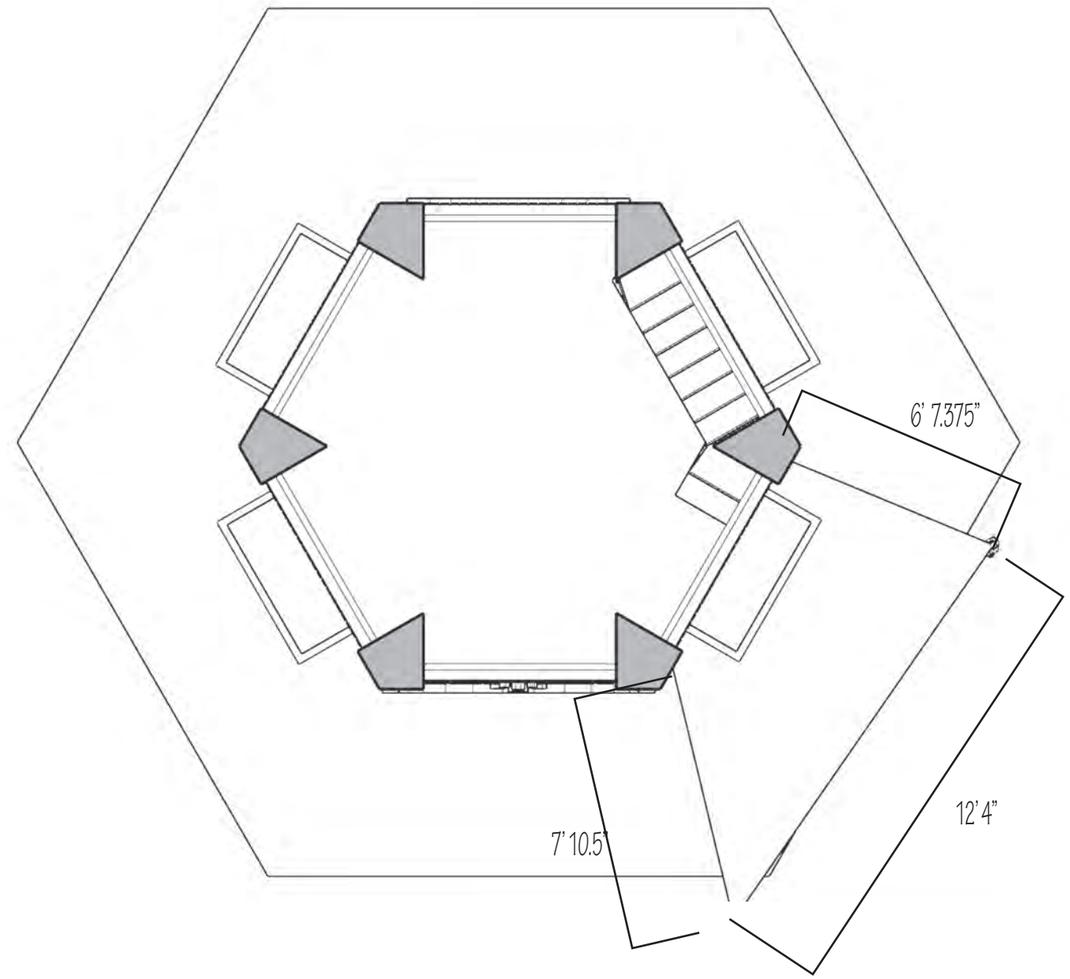

02 FP03 POS AND CUE PLAN VIEW
SCALE: NTS

Tia DESIGN CONSULTANT

NOTES	REVISIONS					KEY REVIEWS	APPROVALS	PAGE NUMBER	PAGE NUMBER
	NO.	DNE	REVISED FOR	DESCRIPTION	REVIEWED BY			K015	A115
COMPANY & CONTACT INFO								PROJECT NUMBER 001	
								SHEET TITLE CUE FLOOR PLAN	

CF001

A116- 02, 03, 04, 05

01 CID01 COMPONENT IDENTIFICATION REFERNCE
SCALE: NTS

02 CF001 POS BENCH (CF001) FRONT ELEVATION
SCALE: NTS

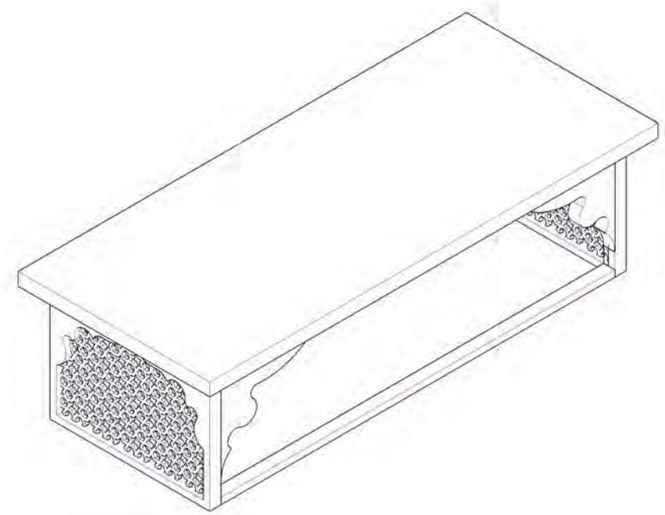

03 CF001.1 POS BENCH (CF001) ISOMETRIC VIEW
SCALE: NTS

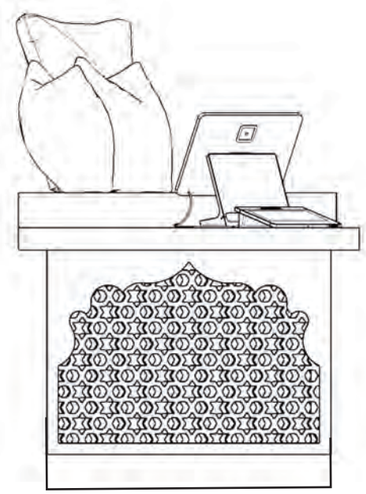

04 CF001.2 POS BENCH (CF001) SIDE ELEVATION
SCALE: NTS

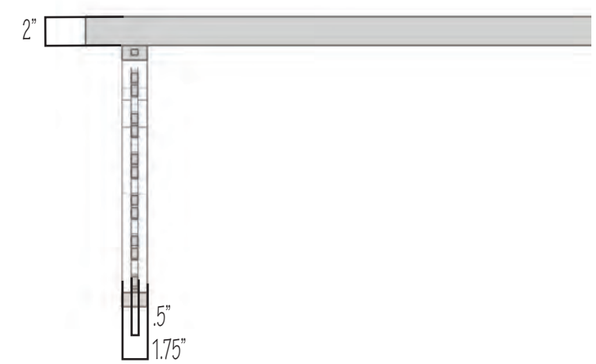

05 CF001.3 POS BENCH (CF001) CORNER SECTION
SCALE: NTS

Tia DESIGN CONSULTANT

NOTES

CF001 features the use of patterns **PATT01** and **PATT12**

COMPANY & CONTACT INFO

REVISIONS

NO.	DNE	REVISED FOR	DESCRIPTION	REVIEWED BY

KEY REVIEWS

APPROVALS

PAGE NUMBER K016

PROJECT NUMBER 001

SHEET TITLE POS

PAGE NUMBER A116

S001
A117-02,03

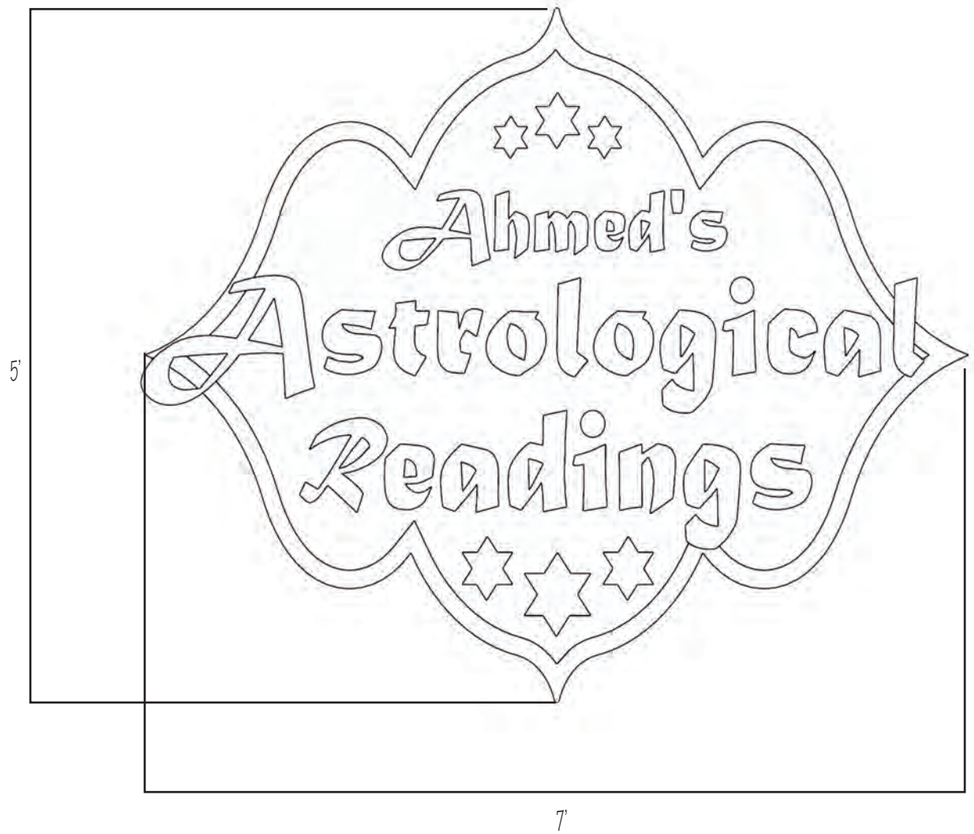

01 CID01 COMPONENT IDENTIFICATION REFERNCE
SCALE: NTS

02 S001 MAIN MARQUEE (S001) ELEVATION
SCALE: NTS

01 CID01 MAIN MARQUEE (S001) SIDE ELEVATION
SCALE: NTS

Tia DESIGN CONSULTANT

NOTES	REVISIONS					KEY REVIEWS	APPROVALS	PAGE NUMBER	PAGE NUMBER
	NO.	DNE	REVISED FOR	DESCRIPTION	REVIEWED BY			K017	
								PROJECT NUMBER 001	A117
COMPANY & CONTACT INFO								SHEET TITLE SIGNAGE	

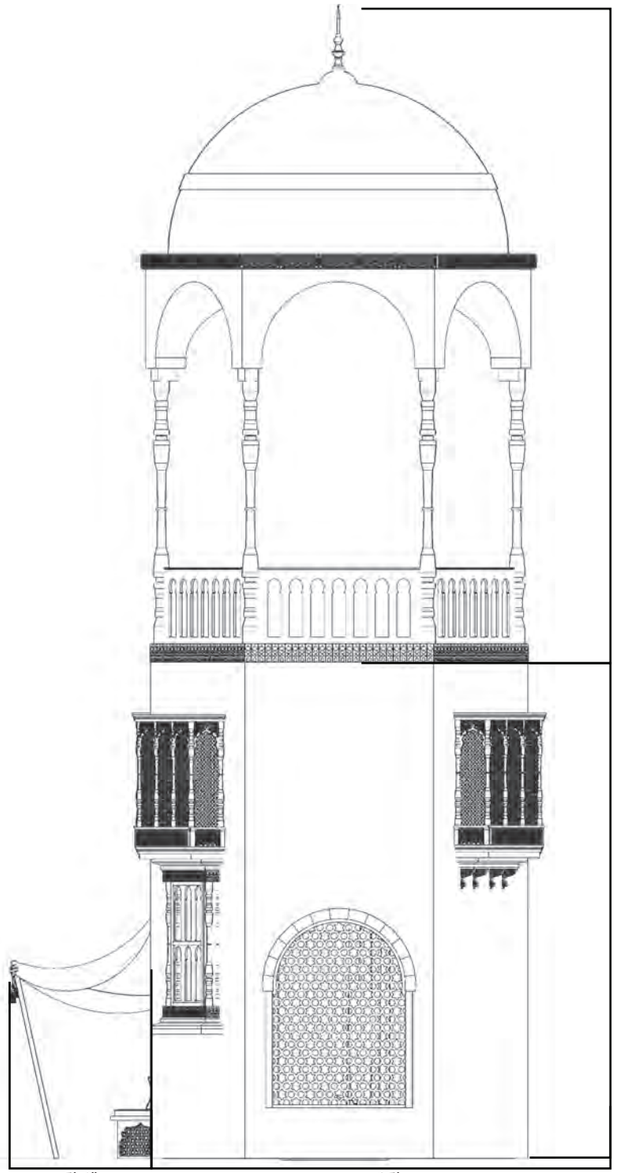

01 EW03 EXTERIOR WALL ELEVATION- BACK
SCALE: 1'=1/6"

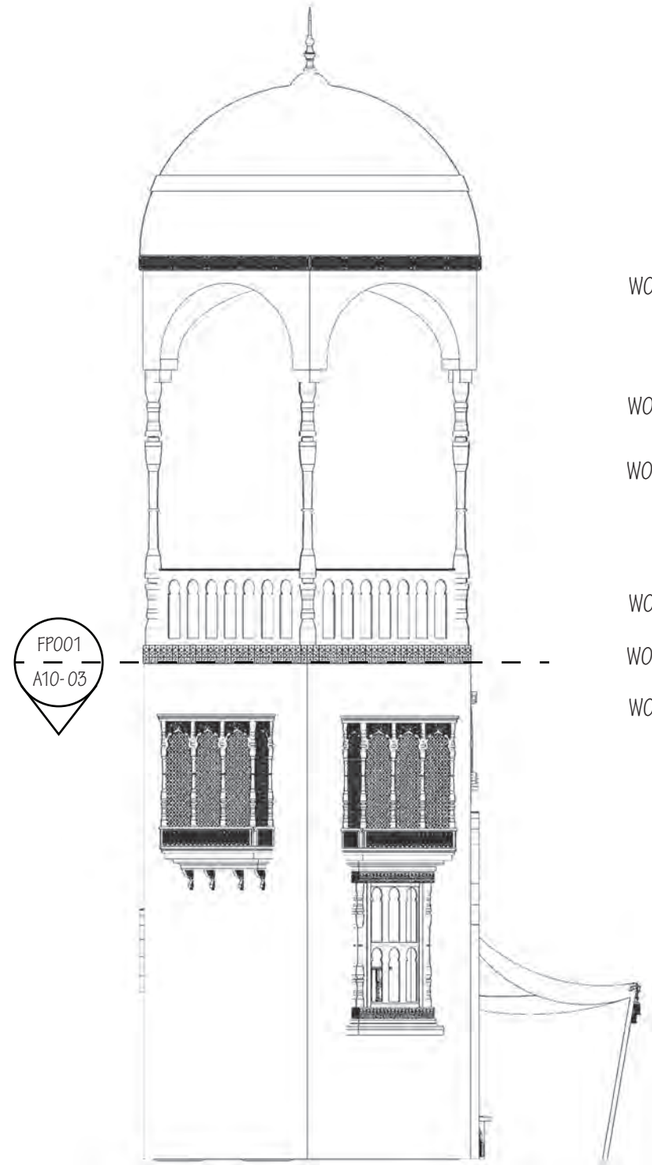

02 EW04 EXTERIOR WALL ELEVATION- LEFT
SCALE: 1'=1/6"

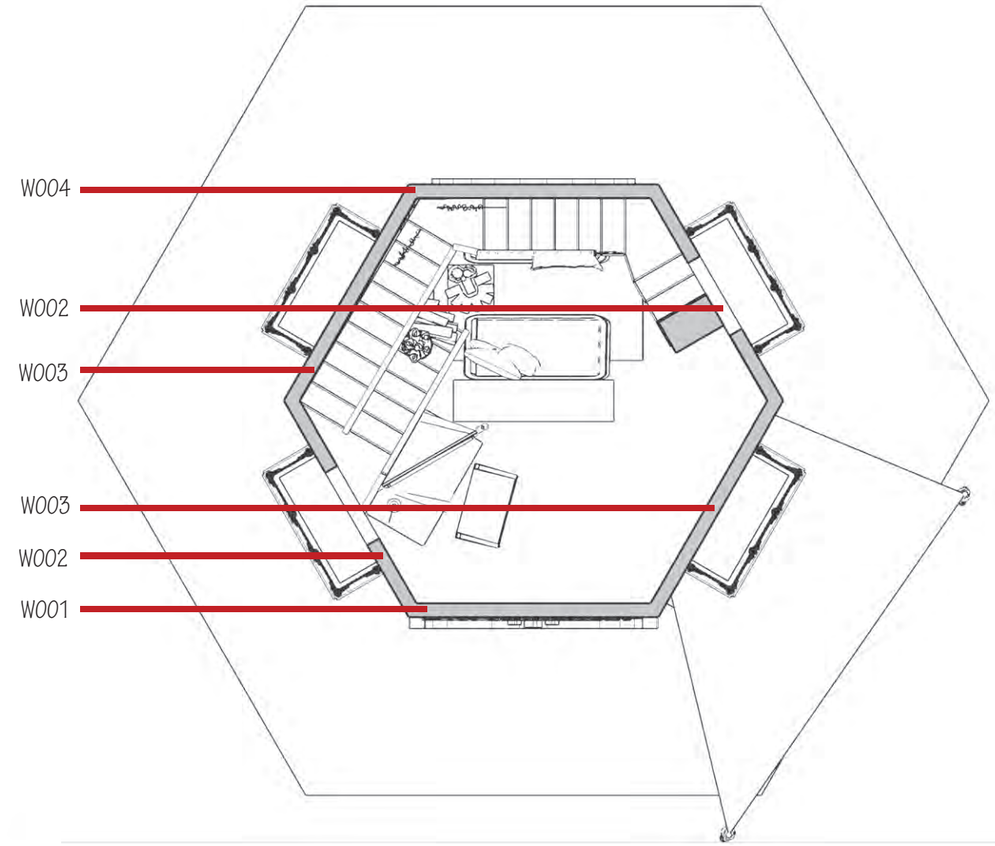

03 FP001 PLAN VIEW- WALL IDENTIFICATION
SCALE: NTS

Tia DESIGN CONSULTANT

NOTES	REVISIONS					KEY REVIEWS	APPROVALS	PAGE NUMBER	PAGE NUMBER
	NO.	DNE	REVISED FOR	DESCRIPTION	REVIEWED BY			K005	
								PROJECT NUMBER 001	A105
COMPANY & CONTACT INFO								SHEET TITLE KIOSK- MAIN ELEVATIONS	

READING AREA

POS & CUE

SHOW STUDY

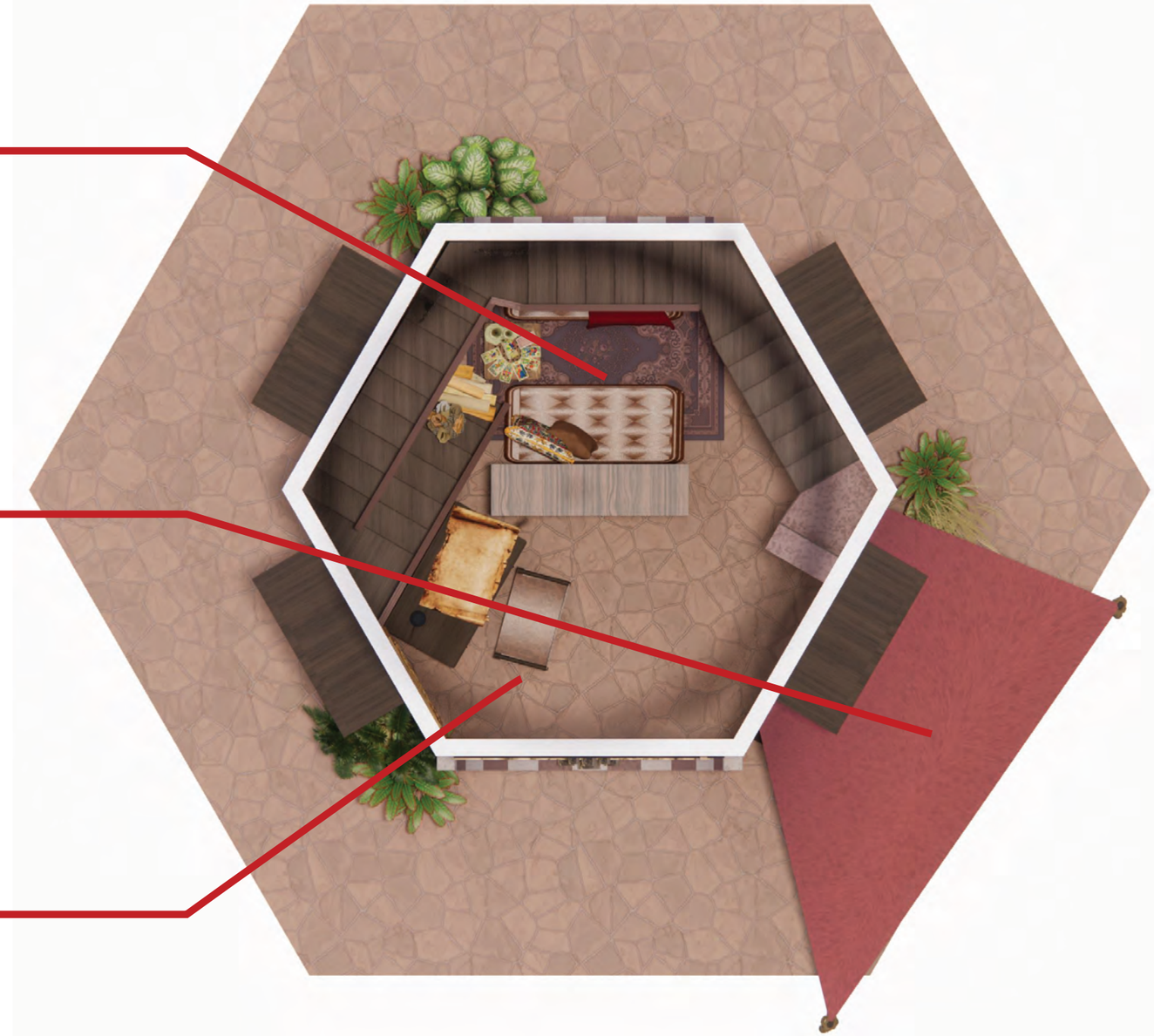

01 FP001.1 PLAN VIEW (FP001) RENDERED CALLOUTS
SCALE: NTS

Tia DESIGN CONSULTANT

NOTES	REVISIONS					KEY REVIEWS	APPROVALS	PAGE NUMBER	PAGE NUMBER
	NO.	DNE	REVISED FOR	DESCRIPTION	REVIEWED BY			K018	
								PROJECT NUMBER 001	A118
COMPANY & CONTACT INFO								SHEET TITLE ZONING CALLOUTS	

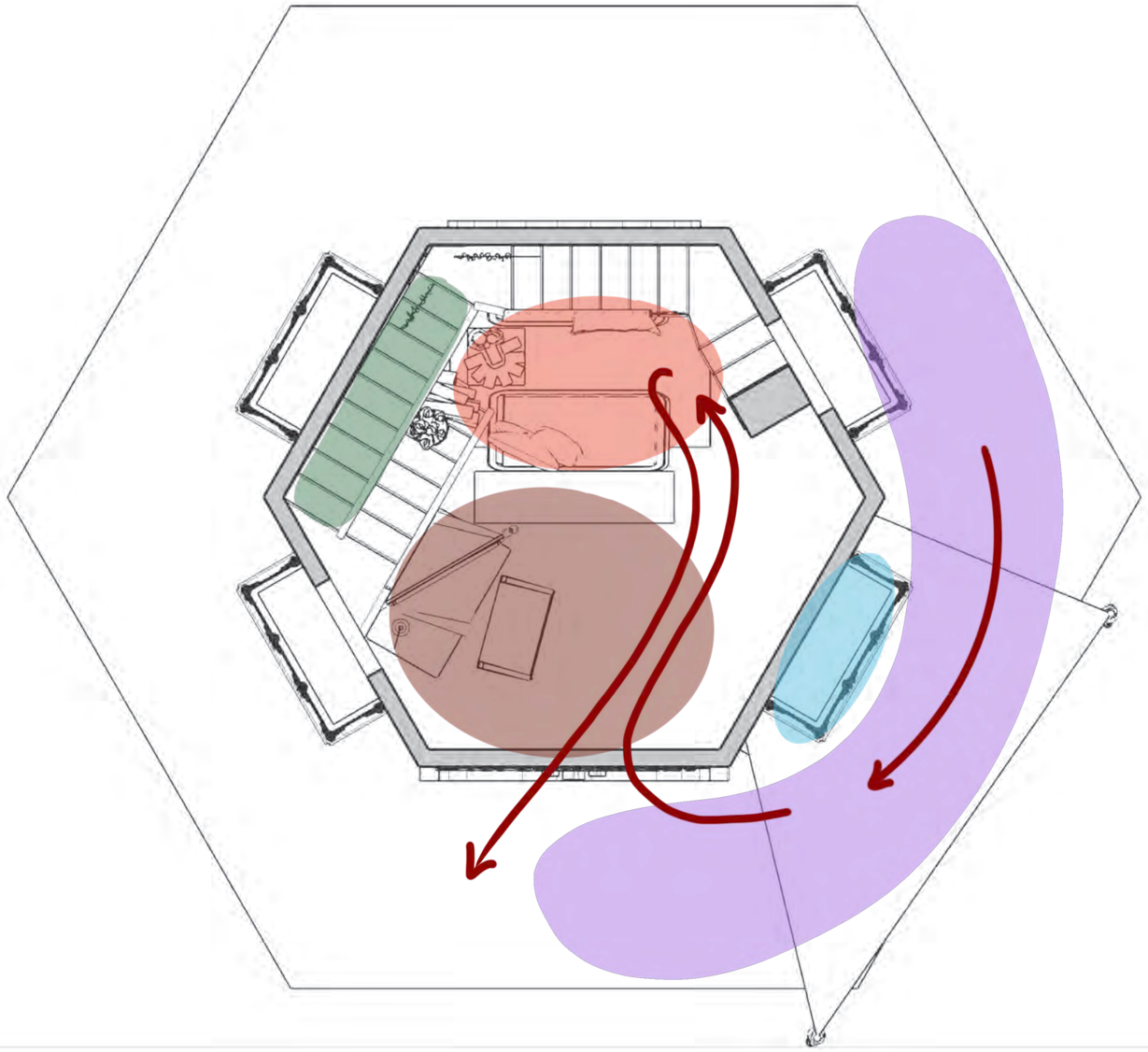

01
FP001.2

PLAN VIEW (FP001) FLOW AND ZONING
SCALE: NTS

Tia DESIGN CONSULTANT

NOTES	REVISIONS					KEY REVIEWS	APPROVALS	PAGE NUMBER	PAGE NUMBER
	NO.	DNE	REVISED FOR	DESCRIPTION	REVIEWED BY			PAGE NUMBER K019	
								PROJECT NUMBER 001	A119
COMPANY & CONTACT INFO								SHEET TITLE FLOW & ZONES	

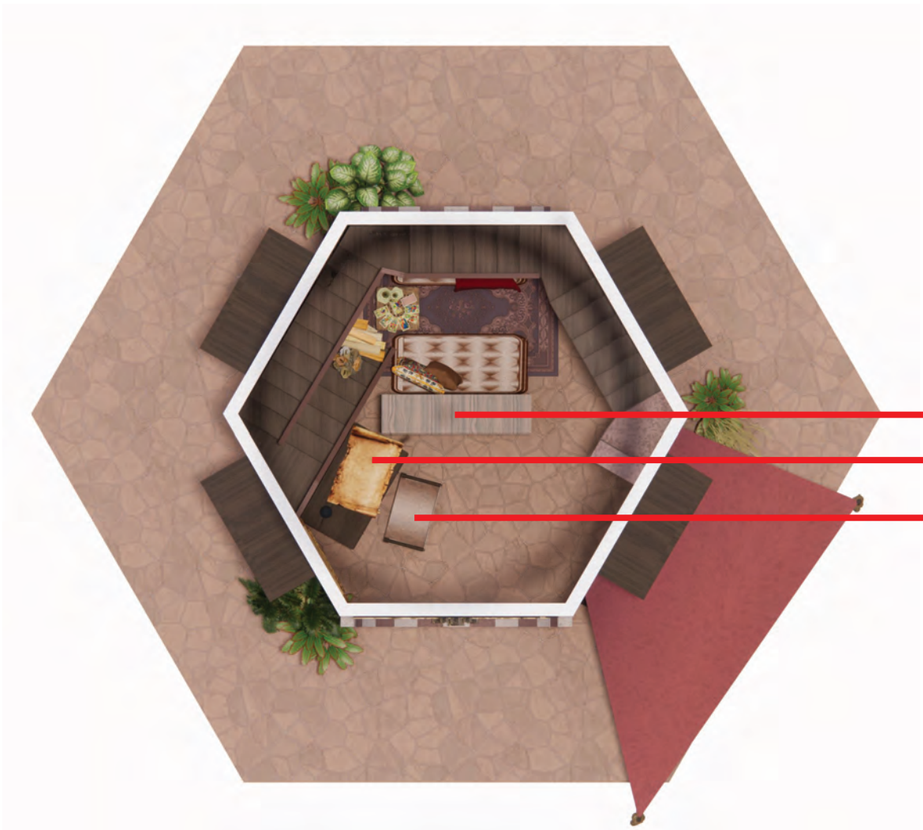

01 FP001.3 PLAN VIEW (FP001) RENDERED FURNITURE CALLOUTS
SCALE: NTS

02 CF002 BOOKSHELF (CF002) RENDERED
SCALE: NTS

03 CF003 STUDY CHAIR (CF003) RENDERED
SCALE: NTS

04 CF004 DESK (CF004) RENDERED
SCALE: NTS

Tia DESIGN CONSULTANT

NOTES	REVISIONS					KEY REVIEWS	APPROVALS	PAGE NUMBER	PAGE NUMBER
	NO.	DNE	REVISED FOR	DESCRIPTION	REVIEWED BY			K020	A120
COMPANY & CONTACT INFO								PROJECT NUMBER 001	
								SHEET TITLE FURNITURE CALLOUT	

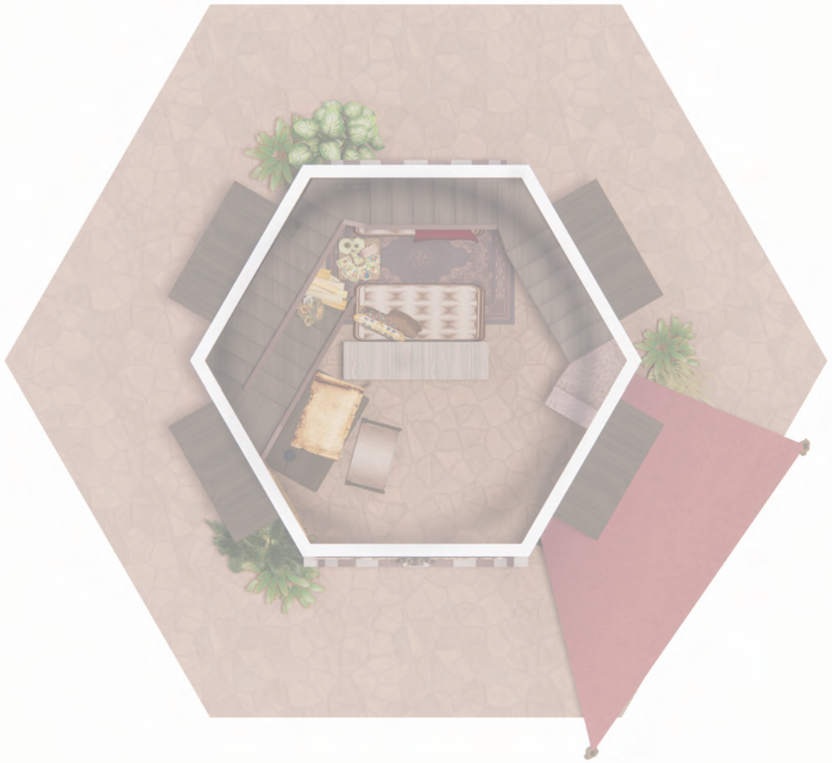

01 FP001.4 STAIR MAP
SCALE: NTS

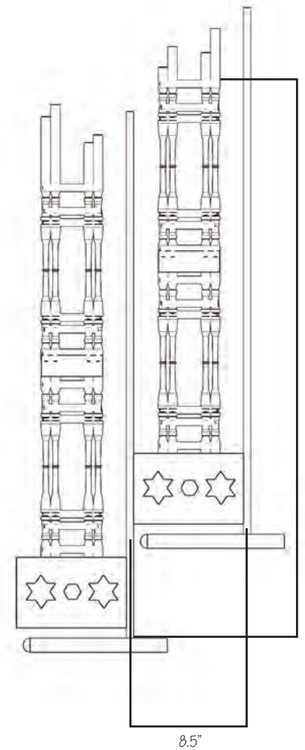

02 SS001 STAIRCASE (SS01) RAILING ELEVATION
SCALE: NTS

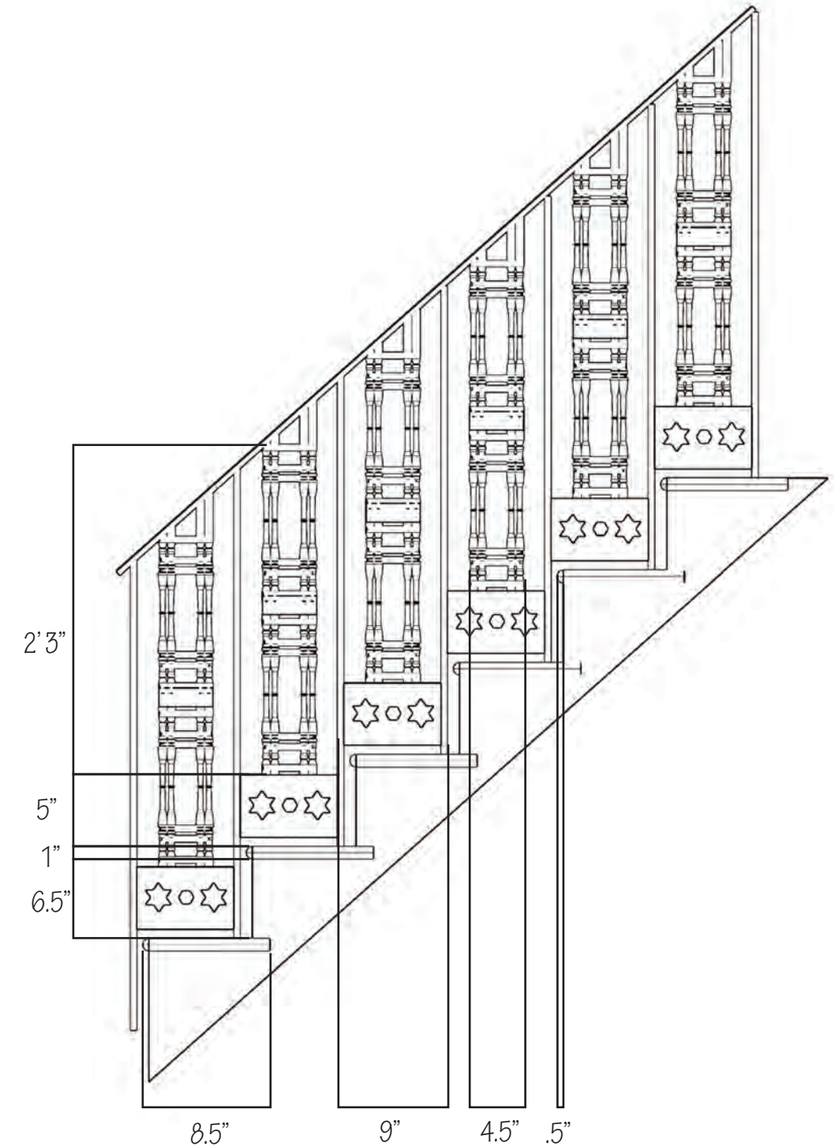

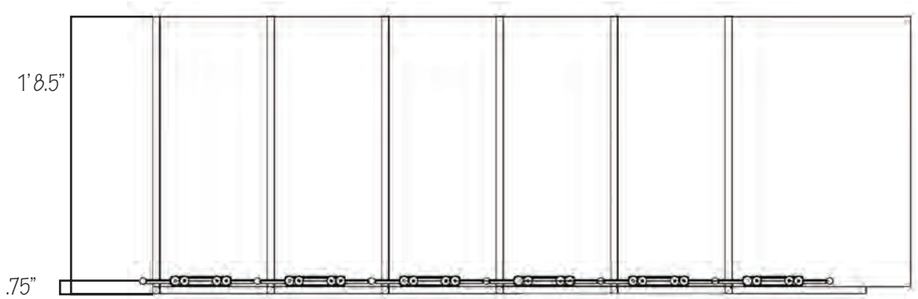

03 SS01.1 STAIRCASE (SS01) FLIGHT PLAN VIEW
SCALE: NTS

04 SS01.2 STAIRCASE (SS01) RAILING SECTION
SCALE: NTS

05 SS01.3 STAIRCASE (SS01) FLIGHT ELEVATION
SCALE: NTS

Tia DESIGN CONSULTANT

NOTES

SS01 features the use of patterns **PATT01**

COMPANY & CONTACT INFO

REVISIONS

NO.	DNE	REVISED FOR	DESCRIPTION	REVIEWED BY

KEY REVIEWS

APPROVALS

PAGE NUMBER K021

PROJECT NUMBER 001

SHEET TITLE STAIRCASE

PROJECT NUMBER A121

01 CF004 DESK (CF004) REDNERED CONCEPT
SCALE: NTS

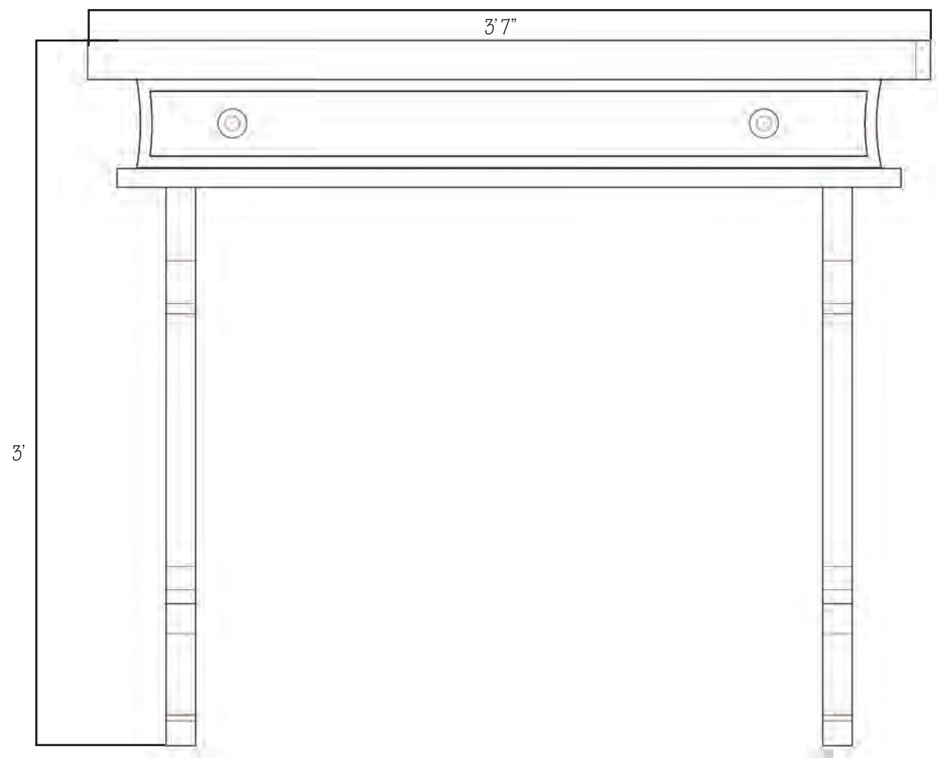

02 CF004.1 DESK (CF004) FRONT ELEVATION
SCALE: NTS

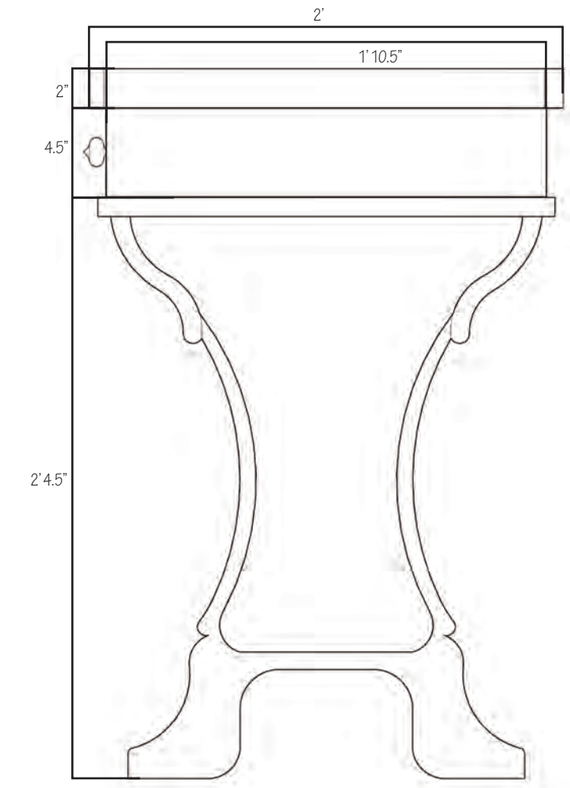

03 CF004.2 DESK (CF004) SIDE ELEVATION
SCALE: NTS

Tia DESIGN CONSULTANT

NOTES	REVISIONS					KEY REVIEWS	APPROVALS	PAGE NUMBER	PROJECT NUMBER
	NO.	DNE	REVISED FOR	DESCRIPTION	REVIEWED BY			K022	
								PROJECT NUMBER 001	A122
COMPANY & CONTACT INFO								SHEET TITLE SHOW DESK	

01 CF003 STUDY CHAIR (CF003) RENDERED CONCEPT
SCALE: NTS

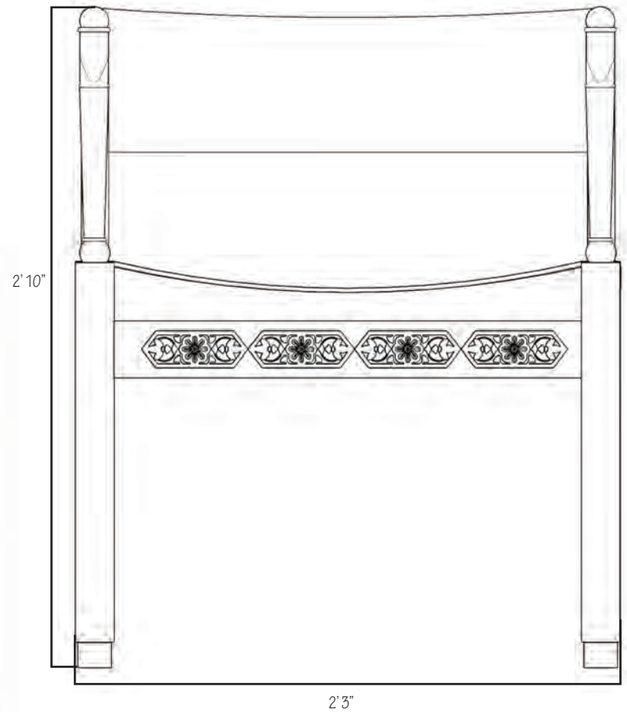

02 CF003.1 STUDY CHAIR (CF003) FRONT ELEVATION
SCALE: NTS

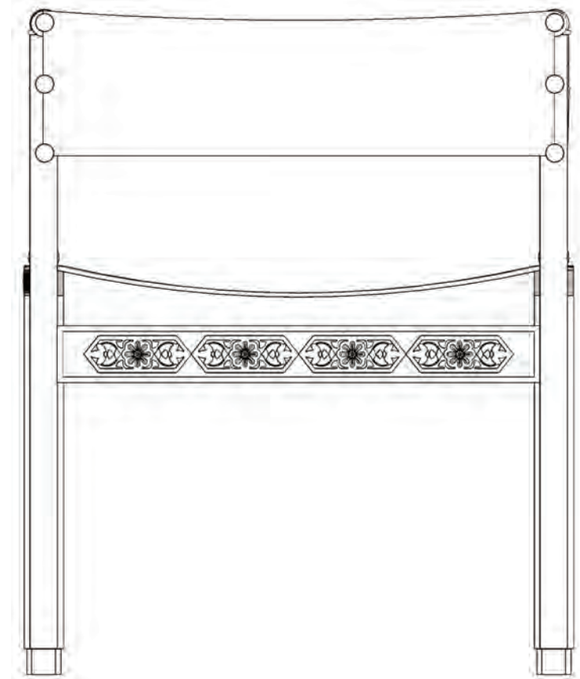

03 CF003.2 STUDY CHAIR (CF003) BACK ELEVATION
SCALE: NTS

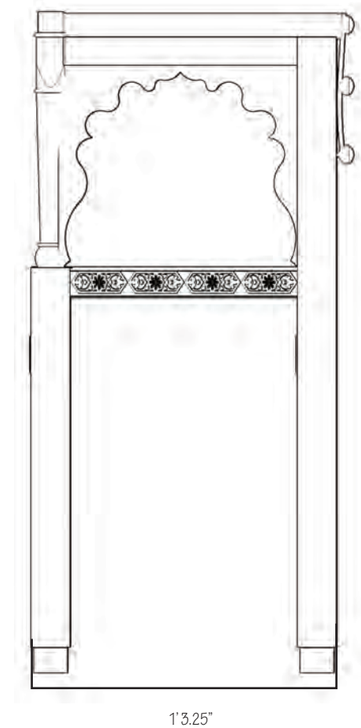

04 CF003.3 STUDY CHAIR (CF003) SIDE ELEVATION
SCALE: NTS

Tia DESIGN CONSULTANT

NOTES

CF003 features the use of patterns **PATT05** and **PATT09**

COMPANY & CONTACT INFO

REVISIONS

NO.	DNE	REVISED FOR	DESCRIPTION	REVIEWED BY

KEY REVIEWS

APPROVALS

PAGE NUMBER K023

PROJECT NUMBER 001

SHEET TITLE STUDY CHAIR

PROJECT NUMBER A123

01 CF002 BOOKSHELF (CF002) RENDERED CONCEPT
SCALE: NTS

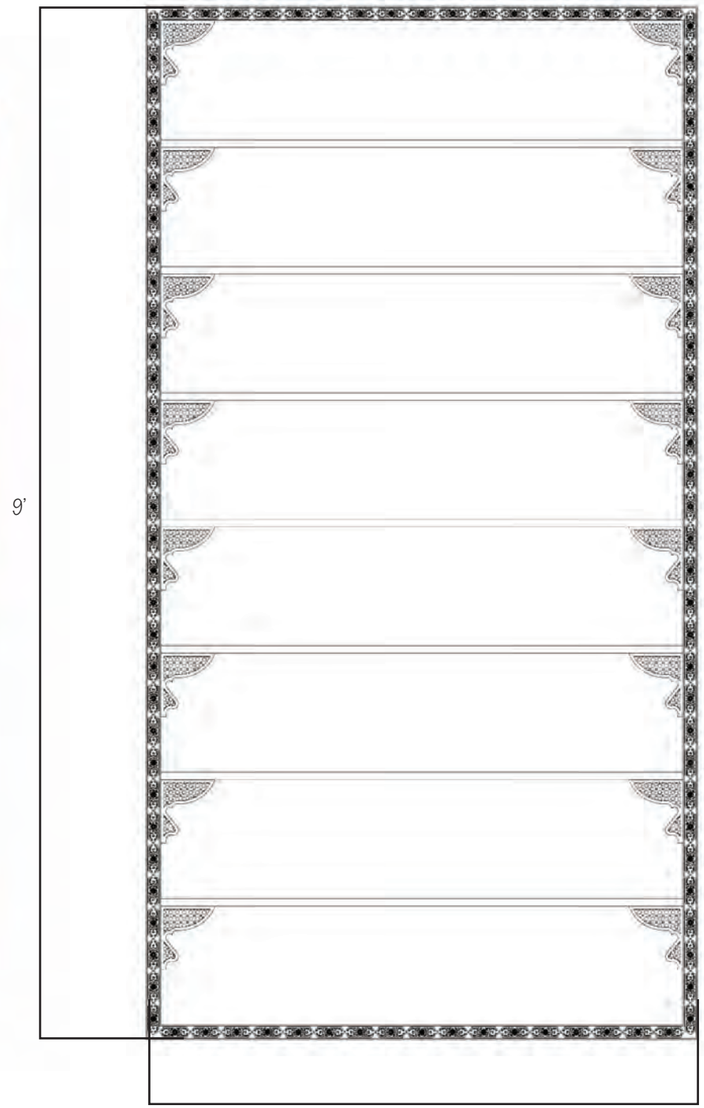

02 CF002.1 BOOKSHELF (CF002) FRONT ELEVATION
SCALE: NTS

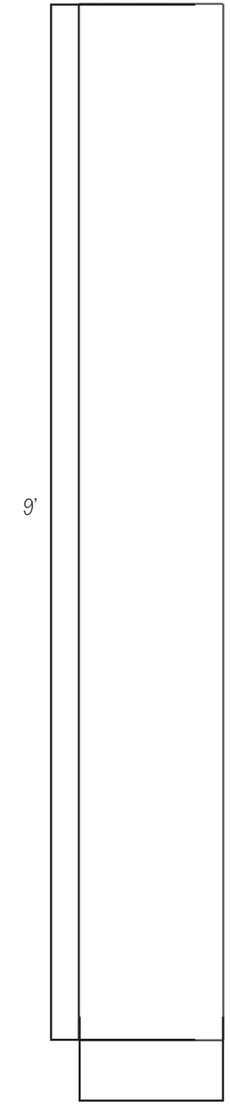

03 CF002.2 BOOKSHELF (CF002) SIDE ELEVATION
SCALE: NTS

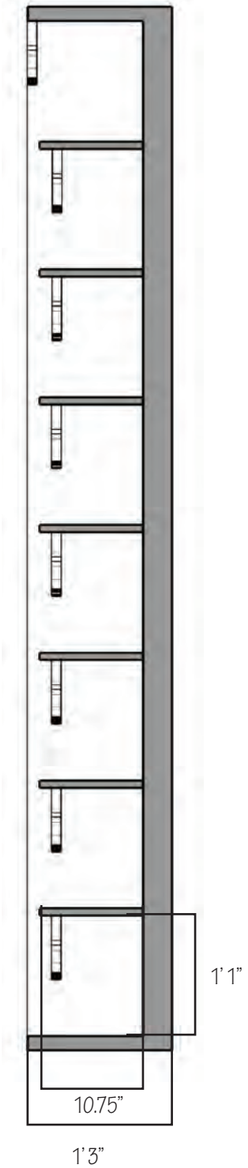

04 CF002.3 SBOOKSHELF (CF002) VERTICAL SECTION
SCALE: NTS

Tia DESIGN CONSULTANT

NOTES

CF002 features the use of patterns **PATT05, PATT06,** and **PATT07**

COMPANY & CONTACT INFO

REVISIONS				
NO.	DNE	REVISED FOR	DESCRIPTION	REVIEWED BY

KEY REVIEWS

APPROVALS

PAGE NUMBER K024

PROJECT NUMBER 001

SHEET TITLE BOOKSHELF

PAGE NUMBER A124

Thank You!